F STREET STORM LINE IMPROVEMENT PLAN

FROM 3RD STREET TO 5TH STREET

LOS BANOS, CALIFORNIA

ABBREVIATION LIST

±	PLUS OR MINUS
AB	AGGREGATE BASE
AC	ASPHALT CONCRETE
ADA	AMERICANS WITH DISABILITY ACT
BC	BEGINNING OF CURVE
BDRY	BOUNDARY
BM	BENCH MARK
BOC	BACK OF CURB
BW	BACK OF WALK
C&G	CURB AND GUTTER
CB	CATCH BASIN
CO	CLEANOUT
℄	CENTER LINE
C or CONC.	CONCRETE
D.I.P.	DUCTILE IRON PIPE
EC	END OF CURVE
ELEV.	ELEVATION
EP	EDGE OF PAVEMENT
ESMT	EASEMENT
EX or EXIST	EXISTING
FH	FIRE HYDRANT
FL	FLOW LINE
GB	GRADE BREAK
GR	GRATE
HORIZ	HORIZONTAL
HP	HIGH POINT
INV.	INVERT
IRR	IRRIGATION
JP	JOINT POLE
LF	LINEAL FEET
MH	MANHOLE
MIN	MINIMUM
N.T.S.	NOT TO SCALE
PL	PROPERTY LINE
POC	POINT OF CONNECTION
PP	POWER POLE
PUE	PUBLIC UTILITY EASEMENT
P or PVMT	PAVEMENT
R	RADIUS
RET	RETURN
ROW	RIGHT OF WAY
S/W	SIDEWALK
SS	SANITARY SEWER
SD	STORM DRAIN
SHT	SHEET
SNS	STREET NAME SIGN
STA	STATION
STD	STANDARD
TBM	TEMPORARY BENCH MARK
TC	TOP OF CURB
TEMP	TEMPORARY
THRU	THROUGH
TPE	TREE PLANTING EASEMENT
VC	VERTICAL CURVE
VERT	VERTICAL
W	WATER
U.N.O.	UNLESS NOTED OTHERWISE
UP	UTILITY POLE
TYP.	TYPICAL

LEGEND (PLANS)

EXISTING	PROPOSED	
		BACKFLOW PREVENTOR
		BENCHMARK
		BOLLARD
		CATCH BASIN
		CLEAN OUT
		CONCRETE
10	10	CONTOUR
		DRAIN INLET
		ELECTRIC METER/BOX
		ELECTROLIER
× 100.65 EP	× 100.65 EP	ELEVATION W/ DESCRIPTION
		FIRE HYDRANT
	G	GAS METER/BOX
GV	GV	GAS VALVE
		MANHOLE
	S	SANITARY SEWER MANHOLE
		SIGN
	D	STORM DRAIN MANHOLE
	S	STREET/SITE LIGHT PULL BOX
	C	TELECOMMUNICATIONS BOX
	C	TELECOMMUNICATIONS MANHOLE
		TREES W/ DRIP LINE
XX"SD XX"SS	XX"SD XX"SS	UNDERGROUND UTILITY LINE LABEL AND DIRECTION
		UTILITY POLE
	W	WATER METER/BOX
WV		WATER VALVE
		CONCRETE
		PAVEMENT

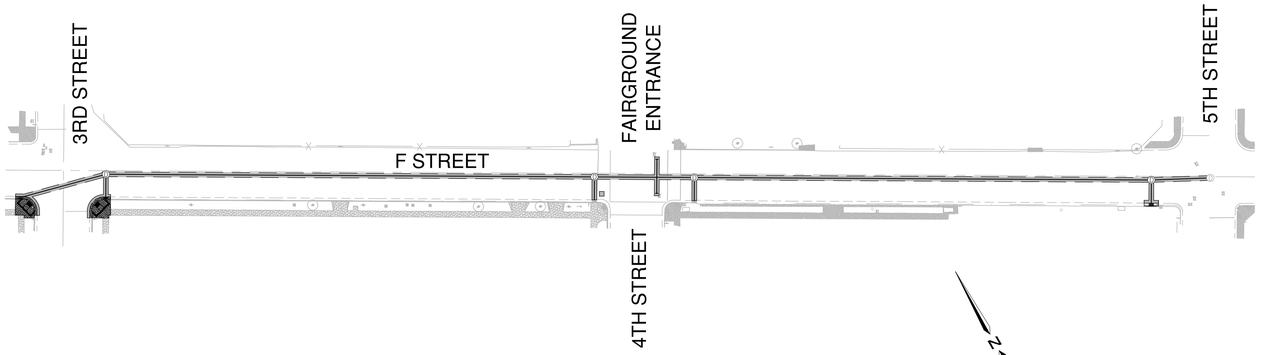

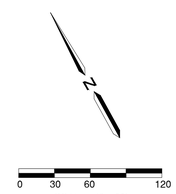

0 30 60 120
SCALE: 1" = 60'

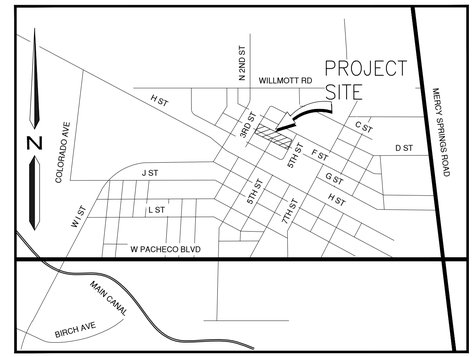

VICINITY MAP

N.T.S.

SHEET INDEX

1. COVER SHEET
2. NOTES
3. CITY STD. DETAILS
4. DETAILS
5. DEMO PLAN
6. PLAN & PROFILE STA. 9+55.00–15+36.00
7. PLAN & PROFILE STA.15+36.00–19+70.00
8. EROSION CONTROL PLAN

CONTACT INFORMATION

OWNERS: CITY OF LOS BANOS
520 J STREET
LOS BANOS, CA 93635
CONTACT: GREG PIMENTEL
(209) 827–7056

CIVIL ENGINEER: O'DELL ENGINEERING
1165 SCENIC DRIVE, SUITE B
MODESTO, CA 95350
CONTACT: MIKE PERSAK
(209) 571–1765

CITY ENGINEER'S APPROVAL

APPROVED BY THE CITY ENGINEER, CITY OF LOS BANOS REVIEWED FOR CONFORMANCE WITH CITY OF LOS BANOS REQUIREMENTS ONLY. SINCE PLANS WERE PREPARED BY OTHERS, NO RESPONSIBILITY FOR THE ADEQUACY OF THE DESIGN IS EXPRESSED.

MARK FACHIN RCE _____ CIVIL ENGINEER EXP _____ DATE _____

GENERAL NOTES

1. THIS SET OF IMPROVEMENT PLANS IS VALID FOR CONSTRUCTION PURPOSES ONLY AFTER BEING SIGNED BY THE CITY ENGINEER AND UPON ISSUANCE OF PERMITS.
2. ALL CONTRACTORS AND SUBCONTRACTORS INVOLVED IN THE CONSTRUCTION OF THIS PROJECT SHALL ATTEND A PRE–CONSTRUCTION CONFERENCE ARRANGED BY THE DEVELOPER AT THE DEPARTMENT OF PUBLIC WORKS FOR CONSTRUCTION AND INSPECTION COORDINATION PRIOR TO COMMENCEMENT OF ANY ON–SITE CONSTRUCTION ACTIVITIES.
3. THE CURRENT LOS BANOS DEPARTMENT OF PUBLIC WORKS IMPROVEMENT STANDARDS AND SPECIFICATIONS THAT HAVE BEEN REFERENCED IN THESE PLANS SHALL BE CONSIDERED AS PART OF THESE PLANS.

SURVEY CONTROL

CONTROL POINT TABLE

POINT NUMBER	ELEVATION	NORTHING	EASTING	RAW DESCRIPTION
15000	118.121	1846416.29	6459954.89	MAG NAIL
15001	117.698	1846163.38	6460275.67	MAG NAIL
15002	118.583	1846597.69	6459524.74	SCRIBED "X"
15003	116.620	1846296.71	6460450.17	SCRIBED "X"

SURVEY CONTROL NOTES

1. THE HORIZONTAL DATUM FOR THIS SURVEY IS NAD83 (2011) [EPOCH DATE 2010.00] AND IS BASED ON A SURVEY USING THE CSDS "CSVSN" REAL–TIME NETWORK PERFORMED ON JANUARY 26, 2016.
2. THE VERTICAL DATUM FOR THIS SURVEY IS BASED ON THE CITY OF LOS BANOS BENCHMARK #160, HAVING AN ELEVATION OF 118.34 FEET AND DESCRIBED AS A 60D NAIL IN POWER POLE PER CITY OF LOS BANOS BENCHMARK CARDS.

CALL BEFORE YOU DIG
USA
800-227-2600

PLAN REVISIONS

NO.	DATE	REVISION
NO.		

O'DELL ENGINEERING
Modesto Palo Alto Pleasanton
1165 Scenic Drive, Suite B
Modesto, CA 95350
Ph 209.571.1765 odellengineering.com

IMPROVEMENT PLAN
F STREET STORM LINE
FROM 3RD STREET TO 5TH STREET
LOS BANOS CALIFORNIA

COVER SHEET

REGISTERED PROFESSIONAL ENGINEER
MICHAEL T. PERSAK
No. C44908
Exp. 6/30/16
CIVIL
STATE OF CALIFORNIA

APPROVED:

DESIGNED:	MP
DRAWN:	EV
CHECKED:	MP
SCALE:	VARIES
DATE:	4/28/2016
JOB NO.:	27916
FILE NO.:	27916–CV.dwg

SHEET NO.
1
OF
8

H:\27916–Los Banos Storm Drain Line\Civil\ConstPlans ACAD 2014\27916–CV.dwg 08:04:03 05/03/2016

GENERAL NOTES:

1. CONTRACTOR AGREES THAT HE SHALL ASSUME SOLE AND COMPLETE RESPONSIBILITY FOR JOB SITE CONDITIONS DURING THE COURSE OF CONSTRUCTION OF THIS PROJECT, INCLUDING SAFETY OF ALL PERSONS AND PROPERTY; THAT THIS REQUIREMENT SHALL APPLY CONTINUOUSLY AND NOT BE LIMITED TO NORMAL WORKING HOURS; AND THAT THE CONTRACTOR SHALL DEFEND, INDEMNIFY AND HOLD THE OWNER, ENGINEER AND THE CITY HARMLESS FROM ANY AND ALL LIABILITY, REAL OR ALLEGED, IN CONNECTION WITH THE PERFORMANCE OF WORK ON THIS PROJECT, EXCEPTING FOR LIABILITY ARISING FROM THE SOLE NEGLIGENCE OF THE OWNER OR THE ENGINEER.

2. UNLESS OTHERWISE STATED, ALL STATIONS INDICATED ON THE IMPROVEMENT PLANS ARE REFERENCED TO THE CENTER LINE OF THE STREET. ALL STATIONS ON THE CURBS ARE PERPENDICULAR TO OR RADIALLY OPPOSITE CENTER LINE STATIONS, UNLESS OTHERWISE NOTED.

3. IT IS THE CONTRACTOR'S RESPONSIBILITY TO VERIFY THE LOCATION OF ALL EXISTING FACILITIES.

4. THE CONTRACTOR SHALL PROVIDE ALL LIGHTS, SIGNS, BARRICADES, FLAGMEN OR OTHER DEVICES NECESSARY TO PROVIDE FOR PUBLIC SAFETY IN ORDINANCE WITH THE CURRENT ISSUE OF "MANUAL OF TRAFFIC CONTROLS WARNING SIGNS, LIGHTS AND DEVICES FOR USE IN PERFORMANCE OF WORK UPON HIGHWAYS" PUBLISHED BY THE STATE OF CALIFORNIA BUSINESS AND TRANSPORTATION AGENCY.

5. ALL MATERIALS, WORKMANSHIP, AND CONSTRUCTION SHALL BE DONE IN ACCORDANCE WITH THE REQUIREMENTS OF THE CURRENT CITY OF LOS BANOS IMPROVEMENT STANDARDS AND SPECIFICATIONS; AND THE LATEST EDITION OF THE STATE OF CALIFORNIA, DEPARTMENT OF TRANSPORTATION, STANDARD SPECIFICATIONS. LOS BANOS STANDARD PLANS ARE AVAILABLE AT WWW.USSPECBOOK.COM.

6. THE CITY IS RESPONSIBLE FOR ARRANGEMENTS TO PAY FOR ALL MATERIAL TESTING REQUIRED BY THE PUBLIC WORKS INSPECTOR. INITIAL COMPACTION TESTING SHALL BE PAID BY THE CITY. RETESTING OF AREAS THAT FAIL THE INITIAL TESTING WILL BE PAID BY THE CONTRACTOR. IT IS THE CONTRACTOR'S RESPONSIBILITY TO SEE TO IT THAT ALL TESTING REQUIRED BY THE PUBLIC WORKS INSPECTOR IS PERFORMED.

7. THE CONTRACTOR SHALL MEET WITH CITY OF LOS BANOS AT LEAST 48 HOURS PRIOR TO START OF CONSTRUCTION WITH 24 HOURS NOTICE REQUIRED BEFORE ALL INSPECTIONS. ALL ARRANGEMENTS FOR SITE INSPECTION ARE THE RESPONSIBILITY OF THE CONTRACTOR. THE CITY OF LOS BANOS WILL REQUIRE A PRE-CONSTRUCTION MEETING PRIOR TO THE START OF CONSTRUCTION.

8. ALL CONSTRUCTION SHALL BE LIMITED TO BETWEEN THE HOURS OF 7:00 A.M. AND 9:00 P.M., MONDAY THROUGH FRIDAY AND INSPECTION REQUESTS SHALL BE LIMITED TO NORMAL CITY BUSINESS HOURS: 7:00 A.M. THROUGH 4:00 P.M. MONDAY THROUGH FRIDAY. IF OVERTIME IS REQUIRED, THE CONTRACTOR SHALL INFORM THE CITY OF LOS BANOS PUBLIC WORKS INSPECTOR. ARRANGEMENTS FOR ANY OVERTIME INSPECTION SERVICES AND PAYMENT OF FEES FOR SAME SHOULD BE MADE 48 HOURS IN ADVANCE AND ARE SUBJECT TO INSPECTION AVAILABILITY AND APPROVAL BY THE CITY ENGINEER.

9. THE CITY OF LOS BANOS OR ASSOCIATED UTILITY COMPANY AND RESIDENCES TO BE AFFECTED SHALL BE NOTIFIED IMMEDIATELY UPON ANY UTILITY SERVICE DISRUPTION OTHER THAN SPECIFIED ON THESE IMPROVEMENT PLANS AND A 48 HOUR NOTICE SHALL BE GIVEN FOR ANY PLANNED DISRUPTION.

10. DUST SHALL BE CONTROLLED BY THE CONTRACTOR AS PER SECTION 10 OF THE STATE OF CALIFORNIA, DEPARTMENT OF TRANSPORTATION, STANDARD SPECIFICATIONS AND THE CITY OF LOS BANOS' SPECIFICATIONS. WATER FOR DUST CONTROL AND USE FOR COMPACTION MAY BE PURCHASED FROM THE APPROPRIATE AGENCY PRIOR TO START OF ANY WORK, AND IT IS THE RESPONSIBILITY OF THE CONTRACTOR FOR ANY FEES OR DEPOSITS. IT IS ALSO THE CONTRACTOR'S RESPONSIBILITY TO MAINTAIN CLEANLINESS OF THE EXISTING IMPROVED STREETS IN THE CONSTRUCTION AREA.

11. THE CONTRACTORS SHALL SUBMIT TO THE CITY OF LOS BANOS, PRIOR TO FINAL ACCEPTANCE, AS BUILT DRAWINGS OF ALL IMPROVEMENTS REPRESENTED BY THE PROJECT PLANS AND SPECIFICATIONS.

12. CONSTRUCTION EQUIPMENT SHALL UTILIZE F STREET AND 5TH STREET FOR ACCESS.

13. THE CONTRACTOR SHALL PROTECT EXISTING IMPROVEMENTS FROM DAMAGE. COST OF REPLACING EXISTING IMPROVEMENTS SHALL BE INCLUDED IN THE UNIT PRICE BID FOR ITEMS REQUIRING REMOVAL AND REPLACEMENT OF EXISTING IMPROVEMENTS.

14. THE CONTRACTOR IS TO MAKE PROVISIONS FOR TRENCH SPOILS.

15. SAWCUT OR GRIND MILL ALL TRENCHES IN EXISTING PAVEMENT.

16. THE CONTRACTOR IS RESPONSIBLE FOR COMPACTION OF ALL UTILITY TRENCHES INCLUDING P.G.&E. AND FOR THE SPOILS GENERATED BY THESE SAME UTILITY TRENCHES.

17. IT IS THE CONTRACTOR'S RESPONSIBILITY TO NOTIFY THE CITY OF LOS BANOS OF ANY ANTICIPATED SOILS IMBALANCE SO GRADES CAN BE ADJUSTED. ADJUSTMENTS REQUIRE THE APPROVAL OF THE CITY ENGINEER.

18. DRAWING DETAIL NUMBERS SHOWN ON THE PLANS REFER TO DRAWINGS CONTAINED IN THE CITY OF LOS BANOS' IMPROVEMENT STANDARDS AND SPECIFICATIONS, SHOWN THUS; (I.E. DET. BF-1)

19. CONTRACTOR SHALL FURNISH CERTIFICATES OF COMPLIANCE TO THE CITY FOR CRUSHED MISCELLANEOUS BASE MATERIAL AND FOR THE SPECIFIED CLASS OF P.C.C. PRIOR TO PAVING ROADWAYS.

20. IN AREAS WHICH ARE TO RECEIVE A.C., P.C.C., OR AGGREGATE BASE, THE CONTRACTOR SHALL MAINTAIN SUBGRADE AT THE AS-GRADED WATER CONTENT. IF THE SUBGRADE IS ALLOWED TO DRY, THE WATER CONTENT OF SOIL SHOULD BE RAISED TO THE RECOMMENDED VALUE SPECIFIED FOR THE PROJECT.

21. STREET SIGNS, TRAFFIC CONTROL SIGNS, AND PAVEMENT MARKINGS SHALL BE PROVIDED AND INSTALLED BY THE CONTRACTOR AT LOCATIONS SHOWN ON THESE PLANS.

22. THE CONTRACTOR SHALL SECURE A TRENCH PERMIT FROM THE CALIFORNIA DIVISION OF INDUSTRIAL SAFETY PRIOR TO EXCAVATION OF ANY TRENCH OVER FIVE FEET IN DEPTH.

23. CONTRACTOR IS RESPONSIBLE FOR COORDINATION OF THE REMOVAL OR RELOCATIONS OF ALL EXISTING UTILITIES WITH RESPECTIVE UTILITY COMPANIES.

24. ALL TRENCHES ON MAJOR AND COLLECTOR STREETS AND CROSS TRENCHES ON ALL STREETS SHALL BE PAVED WITH TEMPORARY PAVING THE SAME DAY THE PAVEMENT CUT IS MADE, OR TRENCH PLATED.

25. IT IS INTENDED THAT THESE PLANS AND SPECIFICATIONS REQUIRE ALL LABOR AND MATERIALS NECESSARY AND PROPER FOR THE WORK CONTEMPLATED AND THAT THE WORK BE COMPLETED IN ACCORDANCE WITH THEIR TRUE INTENT AND PURPOSE. THE CONTRACTOR SHALL NOTIFY THE ENGINEER IMMEDIATELY REGARDING ANY DISCREPANCIES OR AMBIGUITIES WHICH MAY EXIST IN THE PLANS OR SPECIFICATIONS. THE ENGINEER'S INTERPRETATION OR CORRECTION THEREOF SHALL BE CONCLUSIVE.

26. FOR ALL WORK WITHIN PUBLIC RIGHT-OF-WAYS, THE CONTRACTOR SHALL OBTAIN AN ENCROACHMENT PERMIT AND SHALL PRESERVE THE INTEGRITY AND LOCATION OF ANY AND ALL PUBLIC UTILITIES, STREET IMPROVEMENTS AND PROVIDE NECESSARY CONSTRUCTION TRAFFIC CONTROL. THE CONTRACTOR SHALL THROUGH THE ENCROACHMENT PERMIT PROCESS, VERIFY WITH THE CITY OF LOS BANOS THE NEED FOR ANY DETOUR PLAN. IF A PLAN IS REQUIRED, CONTRACTOR SHALL PROVIDE PLAN AND RECEIVE APPROVAL PRIOR TO CONSTRUCTION.

27. THE CONTRACTOR SHALL MAINTAIN A NEATLY MARKED SET OF FULL-SIZE RECORD DRAWINGS SHOWING THE FINAL LOCATION AND LAYOUT OF ALL IMPROVEMENTS.

28. PRIOR TO ACCEPTANCE OF THE PROJECT, THE CONTRACTOR SHALL DELIVER TO THE CITY, ONE SET OF NEATLY MARKED AS-BUILT RECORD DRAWINGS INCLUDING THE INFORMATION REQUIRED ABOVE. AS-BUILT RECORD DRAWINGS SHALL BE REVIEWED AND THE COMPLETE AS-BUILT RECORD DRAWINGS SET SHALL BE CURRENT WITH ALL CHANGES AND DEVIATIONS REDLINED AS A PRECONDITIONED TO THE FINAL PROGRESS PAYMENT APPROVAL AND/OR FINAL CITY ACCEPTANCE. THE DESIGN ENGINEER SHALL PROVIDE THE CITY WITH A COMPLETE REPRODUCIBLE AS-BUILTS RECORD DRAWING SET.

29. WHERE THE PLANS OR SPECIFICATIONS DESCRIBE PORTIONS OF THE WORK IN GENERAL TERMS BUT NOT IN COMPLETE DETAIL, IT IS UNDERSTOOD THAT ONLY THE BEST GENERAL PRACTICE IS TO PREVAIL AND THAT ONLY MATERIALS AND WORKMANSHIP OF THE FIRST QUALITY ARE TO BE USED.

30. THE CONTRACTOR SHALL OBTAIN ALL PERMITS AND LICENSES REQUIRED FOR THE CONSTRUCTION AND COMPLETION OF THE PROJECT.

31. CONSTRUCTION STAKING SHALL BE DONE BY THE CITY OF LOS BANOS.

32. THE CONTRACTOR SHALL EXERCISE DUE CAUTION AND SHALL CAREFULLY PRESERVE BENCH MARKS, REFERENCE POINTS AND ALL SURVEY STAKES, AND SHALL BEAR ALL EXPENSES FOR REPLACEMENT AND/OR ERRORS CAUSED BY THEIR UNNECESSARY LOSS OR DISTURBANCE. THE CONTRACTOR IS RESPONSIBLE FOR PROTECTING AND PRESERVING SURVEY MONUMENTS AND OTHER SURVEY MARKERS. ANY SURVEY MONUMENTS DAMAGED AS A DIRECT OR INDIRECT RESULT OF CONSTRUCTION ACTIVITIES SHALL BE RE-ESTABLISHED BY DULY LICENSED LAND SURVEYOR AT THE CONTRACTOR'S SOLE EXPENSE. A CORNER RECORD SHALL BE FILED IN ACCORDANCE WITH STATE LAW FOR ANY RESET MONUMENTS AT THE CONTRACTOR'S SOLE EXPENSE.

33. PRIOR TO COMMENCING ANY WORK, IT SHALL BE THE CONTRACTOR'S RESPONSIBILITY TO ENSURE THAT ALL CURRENT STANDARDS FOR THE CITY OF LOS BANOS ARE FOLLOWED AS WELL AS TO HAVE EACH UTILITY COMPANY LOCATE, IN THE FIELD THEIR MAIN AND SERVICE LINES. THE CONTRACTOR SHALL NOTIFY MEMBERS OF THE UNDERGROUND SERVICE ALERT (USA) 48 HOURS IN ADVANCE OF PERFORMING ANY EXCAVATION WORK BY CALLING THE TOLL FREE NUMBER (800) 642-2444. THE CONTRACTOR SHALL RECORD THE U.S.A. ORDER NUMBER AND FURNISH ORDER NUMBER TO OWNER PRIOR TO ANY EXCAVATION. IT SHALL BE THE CONTRACTOR'S SOLE RESPONSIBILITY TO PROTECT ALL EXISTING UTILITIES SO THAT NO DAMAGE RESULTS TO THEM DURING THE PERFORMANCE OF THIS CONTRACT. ANY REPAIRS NECESSARY TO DAMAGED UTILITIES SHALL BE PAID FOR BY THE CONTRACTOR. THE CONTRACTOR SHALL BE REQUIRED TO COOPERATE WITH OTHER CONTRACTORS AND UTILITY COMPANIES INSTALLING NEW STRUCTURES, UTILITIES AND SERVICE TO THE DEVELOPMENT.

34. WHENEVER PAVEMENT IS BROKEN OR CUT IN THE INSTALLATION OF THE WORK COVERED BY THESE SPECIFICATIONS. THE PAVEMENT SHALL BE REPLACED, AFTER PROPER BACKFILLING, WITH PAVEMENT MATERIALS EQUAL TO OR BETTER THAN THE MATERIALS USED IN THE ORIGINAL PAVING. THE FINISHED PAVEMENT SHALL BE SUBJECT TO THE APPROVAL OF THE CITY ENGINEER.

35. PAYMENT FOR PAVEMENT WILL BE MADE ONLY FOR AREAS SHOWN ON PLANS, REPLACEMENT OF PAVEMENT WHICH IS BROKEN OR CUT DURING THE INSTALLATION OF THE WORK COVERED BY THESE SPECIFICATIONS, AND WHICH LIES OUTSIDE OF SAID AREAS, SHALL BE INCLUDED IN THE CONTRACTOR'S UNIT PRICE FOR PAVEMENT, AND NO ADDITIONAL PAYMENT SHALL BE MADE FOR SUCH WORK.

CLEARING NOTES:

1. THE CONTRACTOR SHALL REVIEW SITE PRIOR TO BIDDING. ALL VEGETATION, STRUCTURES, TREES, DELETERIOUS MATERIAL, ETC. SHALL BE REMOVED FROM THE SITE AT THE EXPENSE OF THE CONTRACTOR AND SHALL BE INCLUDED IN THE LUMP SUM CLEARING COST. ALL WORK SHALL COMPLY WITH ASTM REQUIREMENTS AND CITY STANDARDS.

DUST CONTROL NOTES:

1. SPRAY WATER ON ALL EXPOSED EARTH SURFACED DURING CLEARING, GRADING, EARTH MOVING AND OTHER SITE PREPARATION ACTIVITIES THROUGHOUT THE DAY TO MINIMIZE DUST. USE TARPAULINS OR OTHER EFFECTIVE COVERS ON ALL STOCKPILED EARTH MATERIAL AND ON ALL HAUL TRUCKS TO MINIMIZE DUST. SWEEP THE ADJACENT STREET FRONTAGES USING A VACUUM OR SELF-CONTAINED MECHANICAL STREET SWEEPER AT LEAST ONCE A DAY OR AS NEEDED TO REMOVE SILT AND OTHER DIRT WHICH IS EVIDENT FROM CONSTRUCTION ACTIVITIES. ENSURE THAT CONSTRUCTION VEHICLES ARE CLEANED PRIOR TO LEAVING THE SITE TO PREVENT DUST AND DIRT FROM BEING TRACKED OFF SITE.

2. ALL EXPOSED SURFACES SHALL BE WATERED A MINIMUM OF TWICE DAILY UNLESS DEEMED UNNECESSARY DUE TO WEATHER. WATER SHALL BE APPLIED AS PROVIDED IN SECTION 17 OF CALTRANS STANDARD SPECIFICATIONS.

3. DUST PALLIATIVES MAY BE SUBSTITUTED FOR WATERING UPON THE APPROVAL OF THE CITY ENGINEER. DUST PALLIATIVES SHALL BE APPLIED AS PROVIDED IN SECTION 18 OF CALTRANS STANDARD SPECIFICATIONS.

STORM WATER POLLUTION PREVENTION:

1. STORM WATER POLLUTION PREVENTION PLAN (SWPPP) WILL BE PREPARED IN ACCORDANCE WITH THE CURRENT STATE WATER RESOURCES CONTROL BOARD N.P.D.E.S. PERMIT REQUIREMENTS. CONTRACTOR SHALL SUPPLY A SWPPP COMPLETED BY A QUALIFIED SWPPP DEVELOPER (QSD). THE SWPPP SHALL BE AVAILABLE AT THE PROJECT SITE AT ALL TIMES DURING CONSTRUCTION.

STORM DRAIN NOTES:

1. THE CONTRACTOR SHALL EXPOSE ALL EXISTING STORM DRAIN PIPES WHERE A CONNECTION IS TO BE MADE SO THAT THE CITY INSPECTOR CAN VERIFY EXISTING FLOWLINES AND LOCATIONS BEFORE START OF CONSTRUCTION.

2. STORM DRAIN LINE CONSTRUCTION SHALL BE IN ACCORDANCE WITH THE REQUIREMENTS OF THE CITY OF LOS BANOS STANDARD SPECIFICATIONS.

3. CONTRACTOR TO BE RESPONSIBLE FOR ALL TESTING OF STORM DRAIN FACILITIES IN ACCORDANCE WITH THE CITY OF LOS BANOS STANDARD SPECIFICATIONS.

4. ALL MANHOLE RIMS TO BE ADJUSTED TO FINISH GRADE AFTER STREET PAVING, UNLESS OTHERWISE NOTED. COST FOR RAISING FACILITIES TO BE INCLUDED IN UNIT PRICES FOR MANHOLES.

5. THE PREFORMED THERMOPLASTIC CATCH BASIN MARKING SHOWN ON CITY STANDARD DETAIL SD-4 SHALL BE SUBSTITUTED WITH A STAMPED MARKING. SEE MODIFIED DETAIL ON SHEET 3.

STORM DRAIN PIPE MATERIALS:

STORM DRAIN LINE MATERIALS SHALL BE PVC CL.200 C-900, AND SHALL BE IN ACCORDANCE WITH THE REQUIREMENTS OF THE CITY OF LOS BANOS STANDARD SPECIFICATIONS.

WATER NOTES:

1. CONTRACTOR SHALL EXPOSE EXISTING WATER LINES TO VERIFY EXISTING ELEVATION AND LOCATION PRIOR TO START OF CONSTRUCTION.

2. WATER LINE CROSSINGS SHALL MEET STATE HEALTH STANDARDS AND CITY OF LOS BANOS STANDARD SPECIFICATIONS.

3. WATER LINE CONSTRUCTION SHALL BE IN ACCORDANCE WITH THE REQUIREMENTS OF THE CITY OF LOS BANOS STANDARD SPECIFICATIONS.

4. ALL WATER CONNECTIONS SHALL USE MEGA LUG RESTRAINTS.

5. ALL VALVE BOXES SHALL BE ADJUSTED TO FINISH GRADE AFTER STREET PAVING COST FOR RAISING FACILITIES TO BE INCLUDED IN UNIT PRICES FOR VALVES.

6. PRIOR TO FINAL ACCEPTANCE, ALL WATER LINES SHALL BE TESTED AND DISINFECTED IN COMPLIANCE WITH THE REQUIREMENTS OF THE CITY OF LOS BANOS STANDARD SPECIFICATIONS.

7. ALL CONNECTIONS TO EXISTING CITY FACILITIES SHALL BE MADE IN THE PRESENCE OF THE CITY PUBLIC WORKS DEPARTMENT. HOT TAPS SHALL CONFORM TO CITY REQUIREMENTS.

WATER PIPE MATERIALS:

WATER LINE MATERIALS SHALL BE PVC CL.200 C-900, AND SHALL BE IN ACCORDANCE WITH THE REQUIREMENTS OF THE CITY OF LOS BANOS STANDARD SPECIFICATIONS.

CALL BEFORE YOU DIG
U S A
800-227-2600

PLAN REVISIONS

NO.	DATE	REVISION
NO.		

O'DELL ENGINEERING
Modesto Palo Alto Pleasanton
1165 Scenic Drive, Suite B
Modesto, CA 95350
Ph 209.571.1765 odellengineering.com

IMPROVEMENT PLAN
F STREET STORM LINE
FROM 3RD STREET TO 5TH STREET
LOS BANOS CALIFORNIA

NOTES

REGISTERED PROFESSIONAL ENGINEER
MICHAEL F. PERRY
No. C44908
Exp. 12/31/16
CIVIL
STATE OF CALIFORNIA

APPROVED:

DESIGNED:	MP
DRAWN:	EV
CHECKED:	MP
SCALE:	NTS
DATE:	4/28/2016
JOB NO.:	27916
FILE NO.:	27916-NT-DT.dwg

SHEET NO.
2
OF
8

H:\27916-Los Banos Storm Drain Line\Civil\ConstPlans ACAD 2014\27916-NT-DT.dwg 08:04:03 05/03/2016

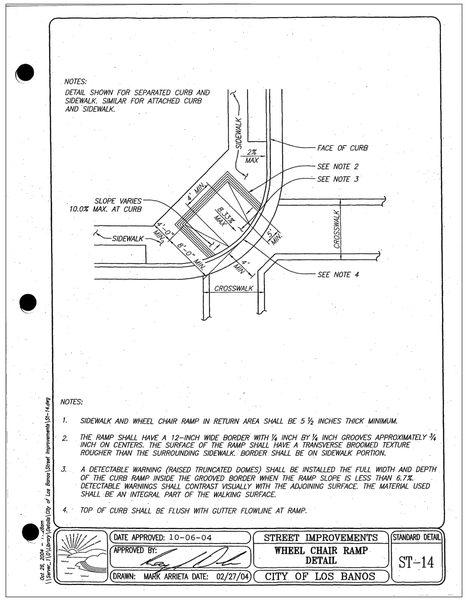

ST-14 WHEEL CHAIR RAMP DETAIL

NOT TO SCALE

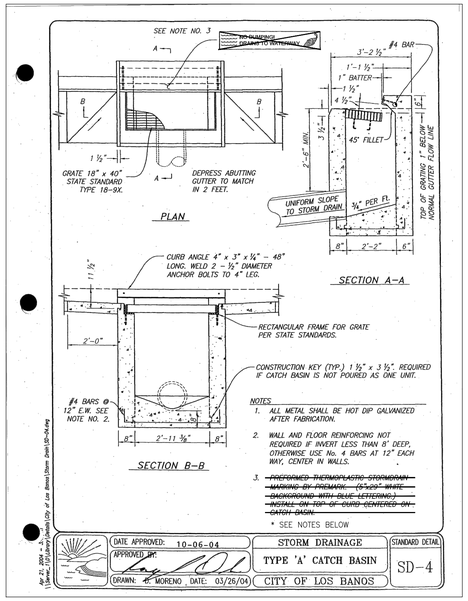

STORM DRAIN MARKING NOTES:

- STORM DRAIN MESSAGE SHALL BE APPLIED IN SUCH A WAY AS TO PROVIDE A CLEAR LEGIBLE IMAGE.
- STORM DRAIN MESSAGE SHALL BE PERMANENTLY APPLIED DURING THE CONSTRUCTION OF THE CURB AND GUTTER.
- LETTERS SHALL BE 1½" IN HEIGHT. DIMENSIONS OF STORM DRAIN MESSAGE SHALL NOT EXCEED 12" X 33".
- THE MESSAGE SHALL BE STAMPED IN CONCRETE TO A DEPTH OF APPROXIMATELY 0.25"

* STAMP MARKING EXAMPLE

SD - 4 CATCH BASIN

NOT TO SCALE

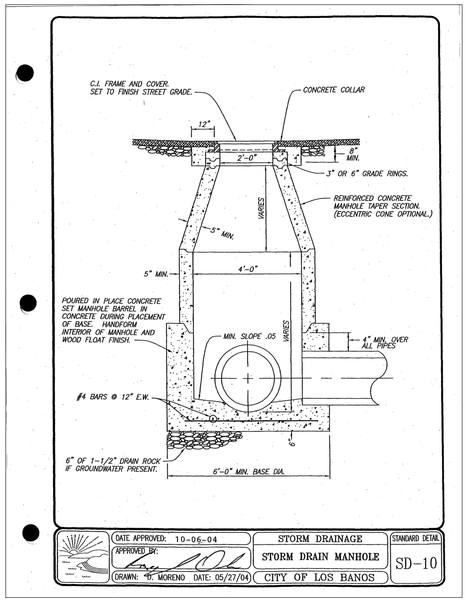

SD - 10 STORM DRAIN MANHOLE

NOT TO SCALE

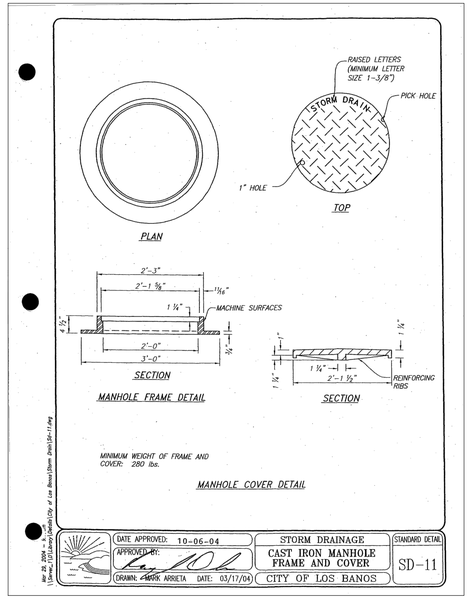

SD - 11 CAST IRON MANHOLE FRAME AND COVER

NOT TO SCALE

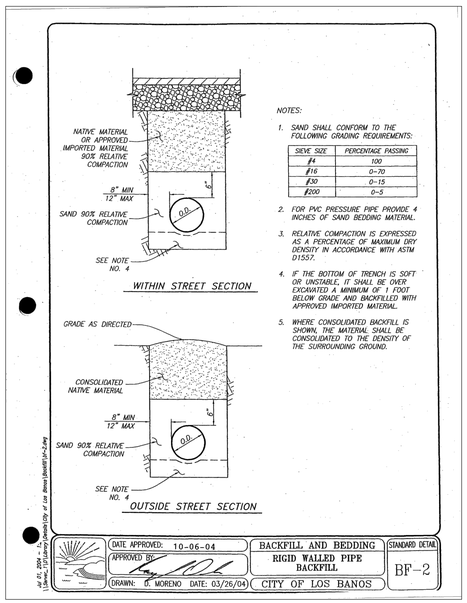

BF - 2 RIGID WALLED BACKFILLED PIPE

NOT TO SCALE

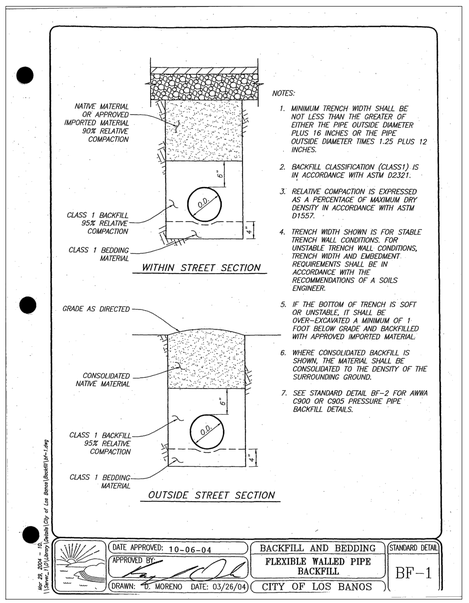

BF - 1 FLEXIBLE WALLED PIPE BACKFILL

NOT TO SCALE

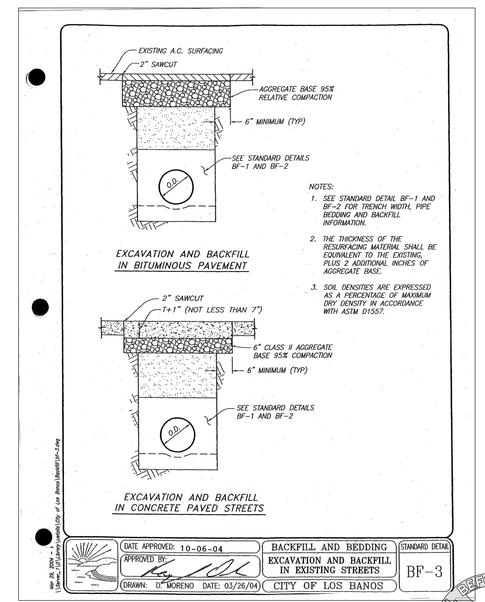

BF - 3 EXCAVATION AND BACKFILL IN EXISTING STREETS

NOT TO SCALE

CALL BEFORE YOU DIG
U S A
800-227-2600

PLAN REVISIONS

NO.	DATE	REVISION
NO.		

O'DELL ENGINEERING
Modesto Palo Alto Pleasanton
1165 Scenic Drive, Suite B
Modesto, CA 95350
Ph 209.571.1765 odellengineering.com

IMPROVEMENT PLAN
F STREET STORM LINE
FROM 3RD STREET TO 5TH STREET

LOS BANOS CALIFORNIA

CITY STD. DETAILS

REGISTERED PROFESSIONAL ENGINEER MICHAEL T. PERSAK No. C44908 Exp. 6/30/16 CIVIL STATE OF CALIFORNIA

APPROVED:

DESIGNED:	MP
DRAWN:	EV
CHECKED:	MP
SCALE:	N.T.S.
DATE:	4/28/2016
JOB NO.:	27916
FILE NO.:	27916-NT-DT.dwg

SHEET NO.
3
OF
8

H:\27916-Los Banos Storm Drain Line\Civil\ConstPlans ACAD 2014\27916-NT-DT.dwg 08:04:03 05/03/2016

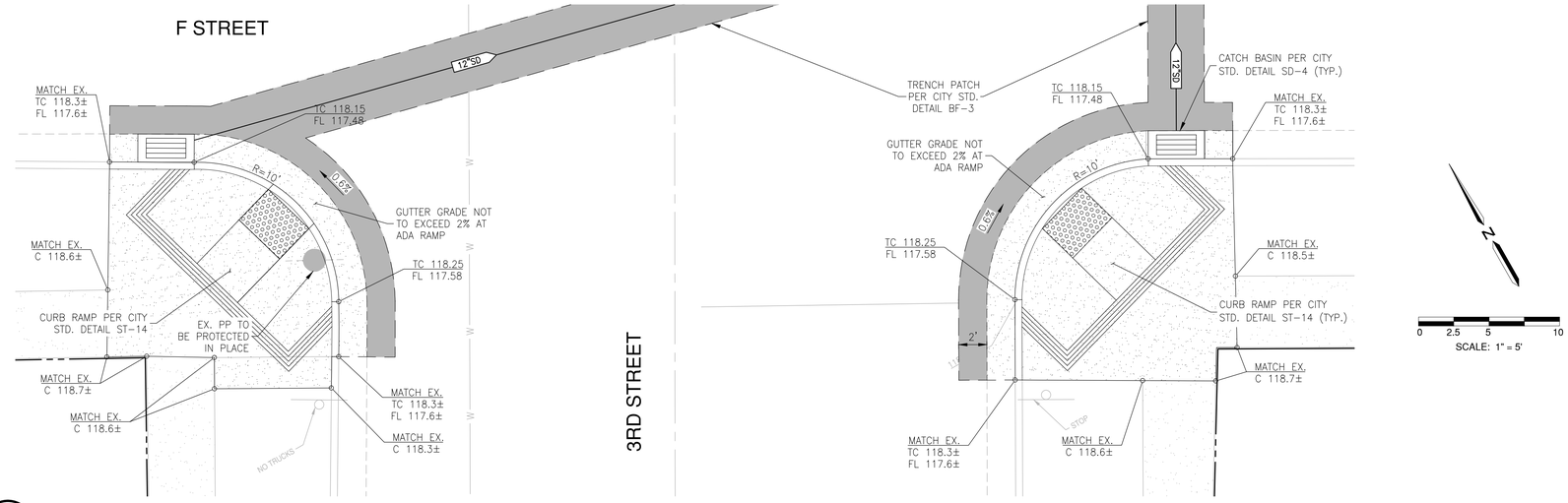

1 CURB RETURN DETAIL

SCALE 1:5

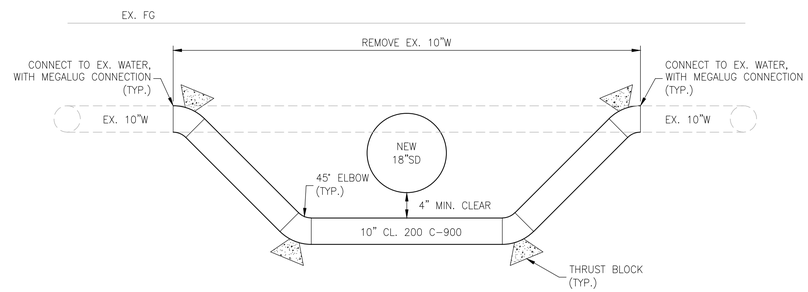

2 WATERLINE CROSSING DETAIL (STA.14+97.42)

NOT TO SCALE

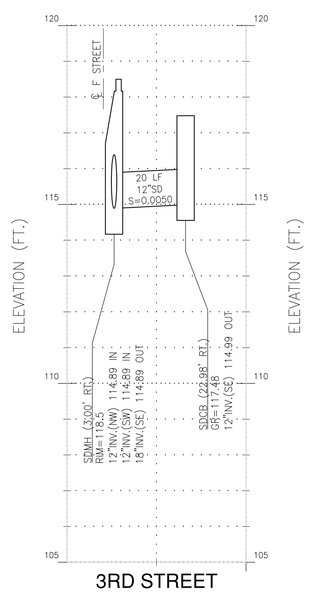

3 CATCH BASIN LATERAL PROFILE (STA.10+35.52)

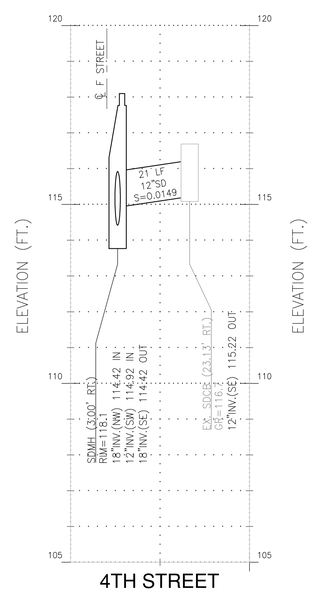

4 CATCH BASIN LATERAL PROFILE (STA.14+45.09)

SCALE:
1"=2' VERTICAL
1"=20' HORIZONTAL

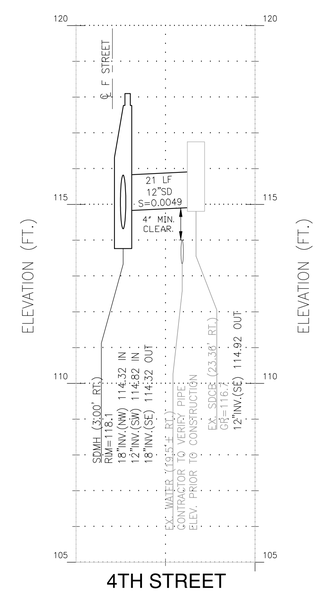

5 CATCH BASIN LATERAL PROFILE (STA.15+28.88)

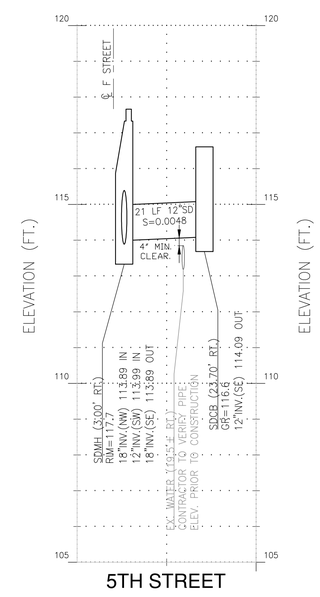

6 CATCH BASIN LATERAL PROFILE (STA.19+12.12)

PLAN REVISIONS

NO.	DATE	REVISION
NO.		

O'DELL ENGINEERING
Modesto Palo Alto Pleasanton
1165 Scenic Drive, Suite B
Modesto, CA 95350
Ph 209.571.1765 odellengineering.com

0 2.5 5 10
SCALE: 1" = 5'

IMPROVEMENT PLAN
F STREET STORM LINE
FROM 3RD STREET TO 5TH STREET

LOS BANOS CALIFORNIA

DETAILS

REGISTERED PROFESSIONAL ENGINEER
MICHAEL F. PERRY
No. C44908
Exp. 12/31/16
CIVIL
STATE OF CALIFORNIA

APPROVED:

DESIGNED:	MP
DRAWN:	EV
CHECKED:	MP
SCALE:	VARIES
DATE:	4/28/2016
JOB NO.:	27916
FILE NO.:	27916-NT-DT.dwg

SHEET NO.
4
OF
8

CALL BEFORE YOU DIG
U S A
800.227.2600

H:\27916-Los Banos Storm Drain Line\Civil\ConstPlans ACAD 2014\27916-NT-DT.dwg 08:04:03 05/03/2016

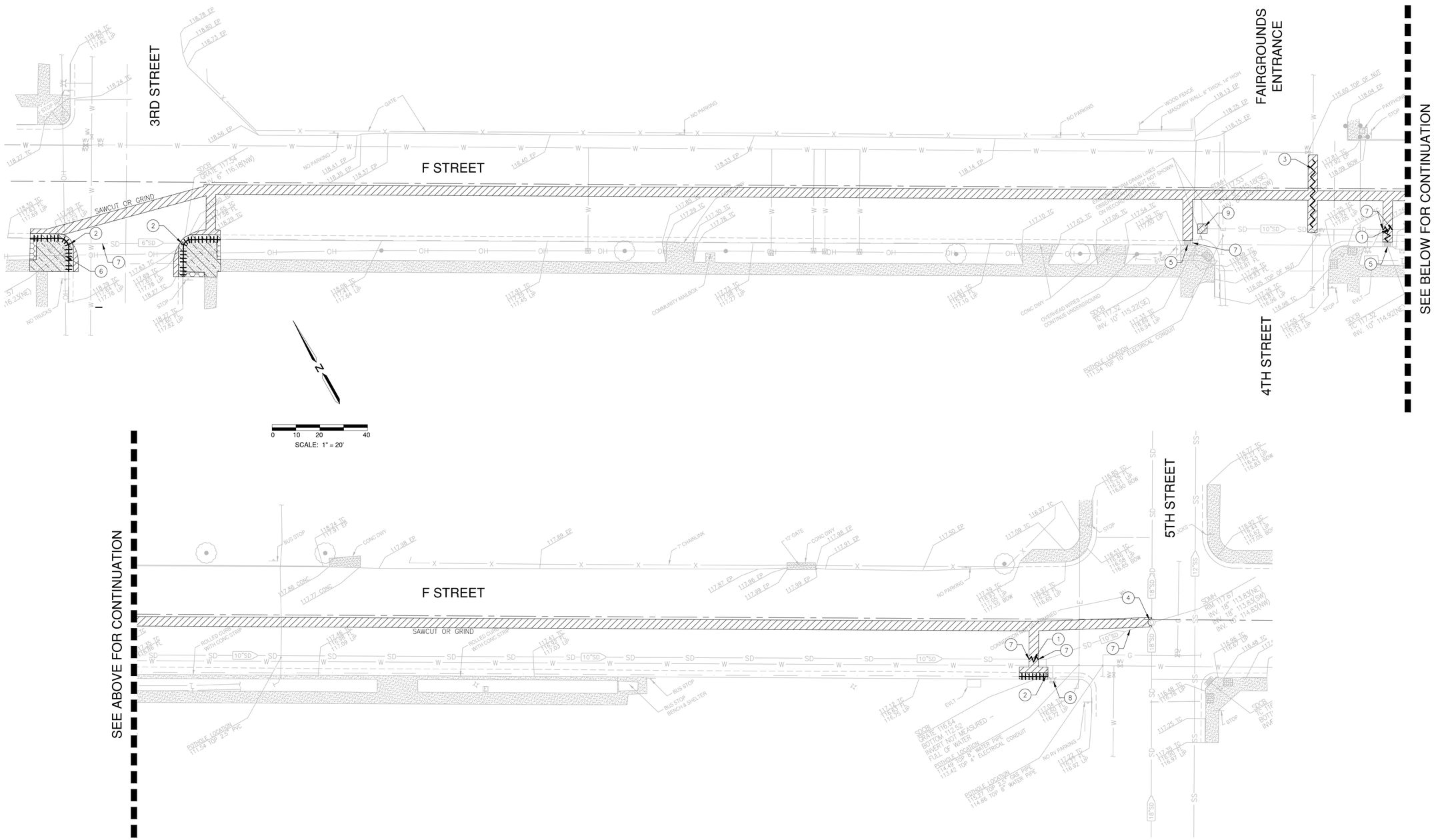

LEGEND

- REMOVE EX. ASPHALT PAVEMENT. SAWCUT OR GRIND PAVEMENT IN NEAT, CLEAN CUTS.
- REMOVE EX. CONCRETE SIDEWALK.
- CLEAR AND GRUB
- REMOVE EX. CURB AND GUTTER. UNLESS OTHERWISE NOTED.
- REMOVE EX. UTILITY LINE

NOTES

1. REMOVE AND REPLACE EX. STORM DRAIN LINE
2. REMOVE AND REPLACE EX. DRAIN INLET
3. REMOVE AND REPLACE EX. 10" WATER LINE
4. PROTECT EX. STORM DRAIN MANHOLE IN PLACE
5. PROTECT EX. STORM DRAIN CATCH BASIN IN PLACE
6. PROTECT EX. UTILITY POLE IN PLACE
7. ABANDON AND CAP EX. STORM DRAIN LINE
8. PROTECT EX. FIRE HYDRANT IN PLACE
9. ABANDON EX. MANHOLE BY REMOVING CONE, RINGS, LID, AND FILLING WITH CONCRETE

DEMOLITION NOTES

1. CONTRACTOR SHALL COORDINATE WITH ALL UTILITY COMPANIES AND PUBLIC AGENCIES TO DISCONNECT EXISTING UTILITIES TO THE SITE PROJECT SITE PRIOR TO DEMOLITION.

CALL BEFORE YOU DIG
USA
800-227-2600

PLAN REVISIONS

NO.	DATE	REVISION
NO.		

O'DELL ENGINEERING
Modesto Palo Alto Pleasanton
1165 Scenic Drive, Suite B
Modesto, CA 95350
Ph 209.571.1765 odellengineering.com

IMPROVEMENT PLAN
F STREET STORM LINE
FROM 3RD STREET TO 5TH STREET

LOS BANOS CALIFORNIA

DEMO PLAN

REGISTERED PROFESSIONAL ENGINEER
MICHAEL T. PERSAK
No. C44908
Exp. 12/31/16
CIVIL
STATE OF CALIFORNIA

APPROVED:

DESIGNED:	MP
DRAWN:	EV
CHECKED:	MP
SCALE:	1" = 20'
DATE:	4/28/2016
JOB NO.:	27916
FILE NO.:	27916-DEMO.dwg

SHEET NO.
5
OF
8

H:\27916-Los Banos Storm Drain Line\Civil\ConstPlans ACAD 2014\27916-DEMO.dwg 08:04:03 05/03/2016

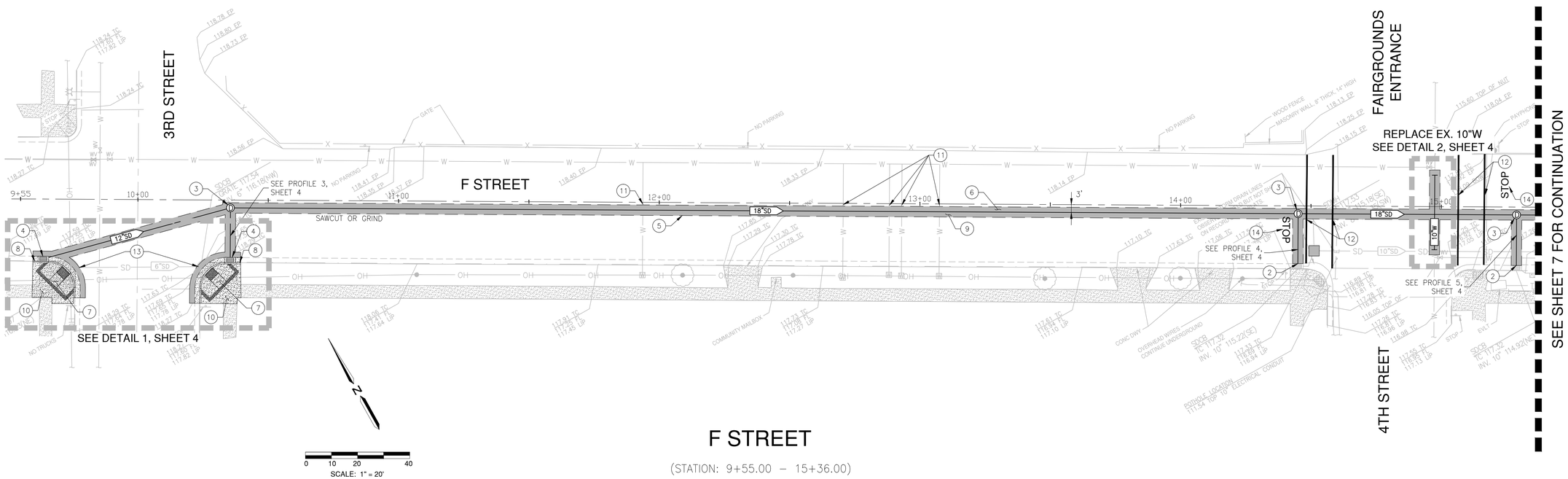

F STREET

(STATION: 9+55.00 – 15+36.00)

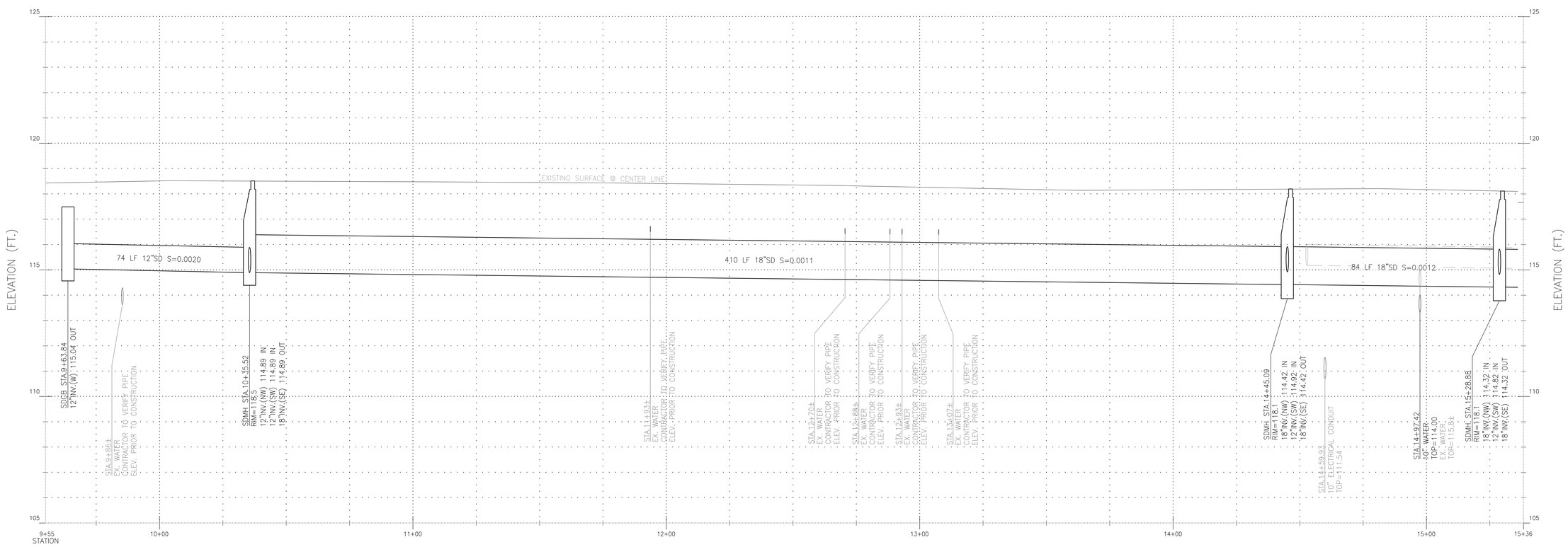

SCALE:
1"=2' VERTICAL
1"=20' HORIZONTAL

UTILITY NOTES

1. CONNECT STORM LINE TO EX. STORM DRAIN MANHOLE PER CITY OF LOS BANOS STD. CONTRACTOR SHALL VERIFY EX. SIZE AND INVERT ELEVATION PRIOR TO CONSTRUCTION.
2. CONNECT STORM DRAIN LATERAL TO EX. STORM DRAIN CATCH BASIN, PER CITY OF LOS BANOS STD.
3. INSTALL STORM DRAIN MANHOLE, PER CITY OF LOS BANOS STD.
4. INSTALL STORM DRAIN CATCH BASIN TYPE 'A', PER CITY OF LOS BANOS STD.
5. SAWCUT OR GRIND IN NEAT STRAIGHT LINE.
6. TRENCH SECTION, PER CITY OF LOS BANOS STD.
7. INSTALL ADA RAMP, PER CITY OF LOS BANOS STD.
8. 8" VERTICAL CURB & GUTTER, PER CITY OF LOS BANOS STD.
9. PAVEMENT SECTION, PER CITY OF LOS BANOS STD.
10. CONCRETE SIDEWALK, PER CITY OF LOS BANOS STD.
11. EX. WATER SERVICE LINE CROSSING. CONTRACTOR TO VERIFY LOCATION & DEPTH PRIOR TO CONSTRUCTION. WATER LATERAL TO BE RELOCATED OVER NEW SD PIPE IF CONFLICT EXISTS.
12. REPAINT ENTIRE EX. CROSSWALK STRIPING WITH THERMOPLASTIC PAINT.
13. CAP AND ABANDON EX. STORM DRAIN LINE.
14. REPAINT "STOP" LEGEND WITH THERMOPLASTIC PAINT.

NOTES

1. PRIOR TO CONSTRUCTION, CONTRACTOR SHALL POTHOLE EX. UTILITIES AT CROSSING'S TO VERIFY LOCATIONS AND DEPTHS.
2. AC PAVEMENT REPAIR WIDTH SHALL BE 1-FT WIDER THAN UTILITY TRENCH WIDTH, PER PUBLIC WORKS INSPECTOR.

CALL BEFORE YOU DIG
800-227-2600

PLAN REVISIONS

NO.	DATE	REVISION
NO.		

O'DELL ENGINEERING
Modesto Palo Alto Pleasanton
1165 Scenic Drive, Suite B
Modesto, CA 95350
Ph 209.571.1765 odellengineering.com

IMPROVEMENT PLAN
F STREET STORM LINE
FROM 3RD STREET TO 5TH STREET

LOS BANOS CALIFORNIA

PLAN & PROFILE
STA.9+55.00–15+36.00

REGISTERED PROFESSIONAL ENGINEER MICHAEL F. PERSAK No. C44908 Exp. 12/31/16 CIVIL STATE OF CALIFORNIA

APPROVED:

DESIGNED:	MP
DRAWN:	EV
CHECKED:	MP
SCALE:	1" = 20'
DATE:	4/28/2016
JOB NO.:	27916
FILE NO.:	27916-PP.dwg

SHEET NO.
6
OF
8

H:\27916-Los Banos Storm Drain Line\Civil\ConstPlans AC4D 2014\27916-PP.dwg 08:05:03 05/03/2016

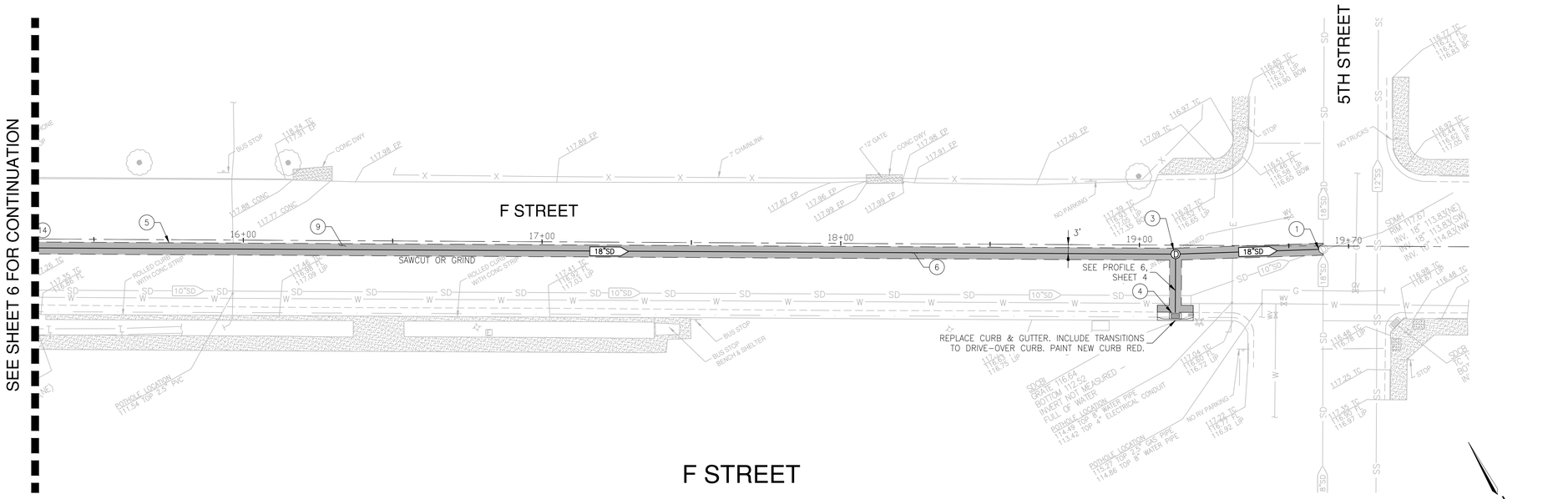

F STREET

(STATION: 15+36.00 – 19+70.00)

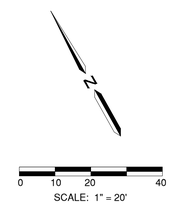

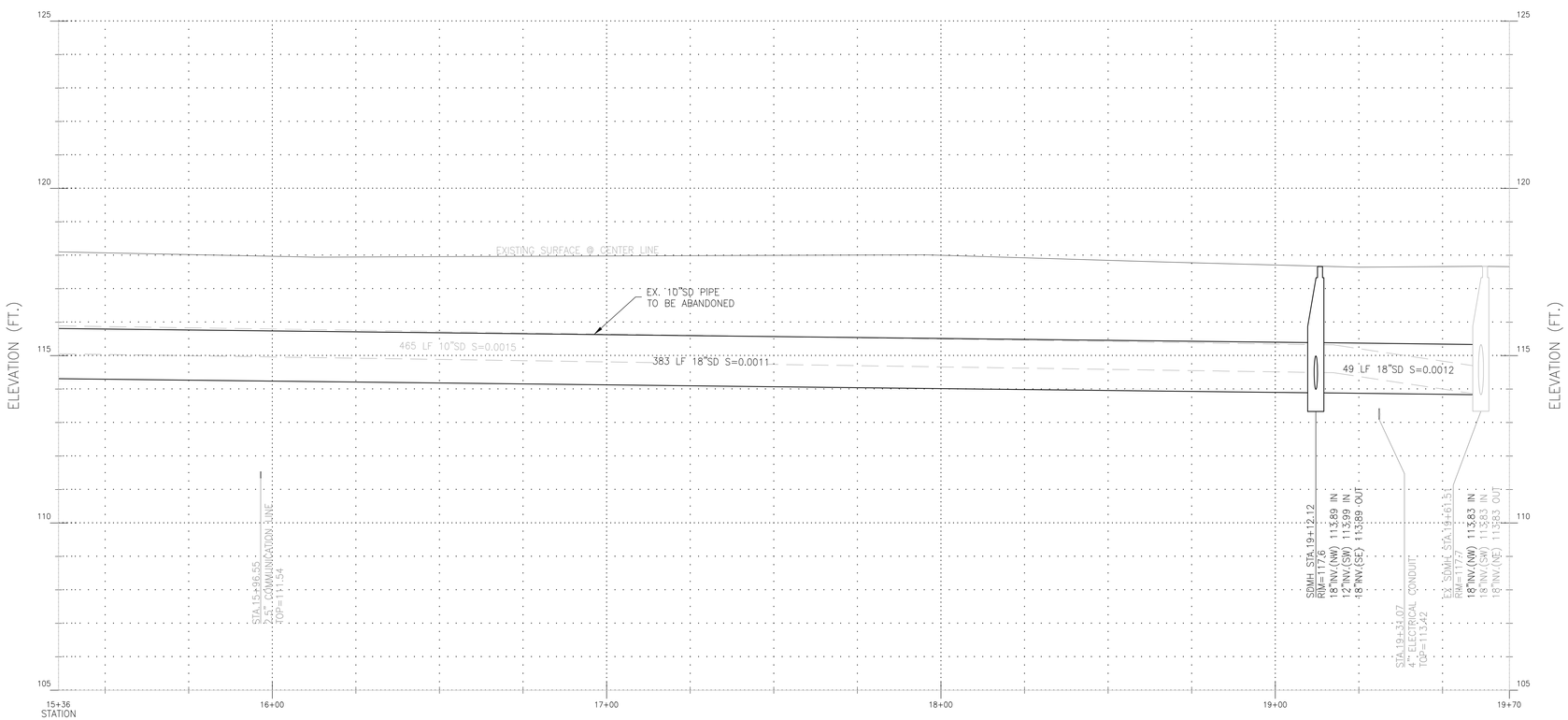

SCALE:
1"=2' VERTICAL
1"=20' HORIZONTAL

UTILITY NOTES

1. CONNECT STORM LINE TO EX. STORM DRAIN MANHOLE PER CITY OF LOS BANOS STD. CONTRACTOR SHALL VERIFY EX. SIZE AND INVERT ELEVATION PRIOR TO CONSTRUCTION.
2. CONNECT EX. STORM DRAIN LATERAL TO STORM DRAIN MANHOLE, PER CITY OF LOS BANOS STD.
3. INSTALL STORM DRAIN MANHOLE, PER CITY OF LOS BANOS STD.
4. INSTALL STORM DRAIN CATCH BASIN TYPE 'A', PER CITY OF LOS BANOS STD.
5. SAWCUT OR GRIND IN NEAT STRAIGHT LINE.
6. TRENCH SECTION, PER CITY OF LOS BANOS STD.
7. INSTALL ADA RAMP, PER CITY OF LOS BANOS STD.
8. 8" VERTICAL CURB & GUTTER, PER CITY OF LOS BANOS STD.
9. PAVEMENT SECTION, PER CITY OF LOS BANOS STD.
10. CONCRETE SIDEWALK, PER CITY OF LOS BANOS STD.
11. EX. WATER SERVICE LINE CROSSING. CONTRACTOR TO VERIFY LOCATION & DEPTH PRIOR TO CONSTRUCTION. WATER LATERAL TO BE RELOCATED OVER NEW SD PIPE IF CONFLICT EXISTS.
12. REPAINT ENTIRE EX. CROSSWALK STRIPING WITH THERMOPLASTIC PAINT.
13. CAP AND ABANDON EX. STORM DRAIN LINE.
14. REPAINT "STOP" LEGEND WITH THERMOPLASTIC PAINT.

NOTES

1. PRIOR TO CONSTRUCTION, CONTRACTOR SHALL POTHOLE EX. UTILITIES AT CROSSING'S TO VERIFY LOCATIONS AND DEPTHS.
2. AC PAVEMENT REPAIR WIDTH SHALL BE 1-FT WIDER THAN UTILITY TRENCH WIDTH, PER PUBLIC WORKS INSPECTOR.

CALL BEFORE YOU DIG
USA
800.227.2600

PLAN REVISIONS

NO.	DATE	REVISION
NO.		

O'DELL ENGINEERING
Modesto Palo Alto Pleasanton
1165 Scenic Drive, Suite B
Modesto, CA 95350
Ph 209.571.1765 odellengineering.com

IMPROVEMENT PLAN
F STREET STORM LINE
FROM 3RD STREET TO 5TH STREET

LOS BANOS CALIFORNIA

PLAN & PROFILE
STA.15+36.00–19+70.00

REGISTERED PROFESSIONAL ENGINEER
MICHAEL T. PIERCE
No. C44908
Exp. 6/30/16
CIVIL
STATE OF CALIFORNIA

APPROVED:

DESIGNED:	MP
DRAWN:	EV
CHECKED:	MP
SCALE:	1" = 20'
DATE:	4/28/2016
JOB NO.:	27916
FILE NO.:	27916-PP.dwg

SHEET NO.
7
OF
8

H:\27916-Los Banos Storm Drain Line\Civil\ConstPlans ACAD 2014\27916-PP.dwg 08:05:03 05/03/2016

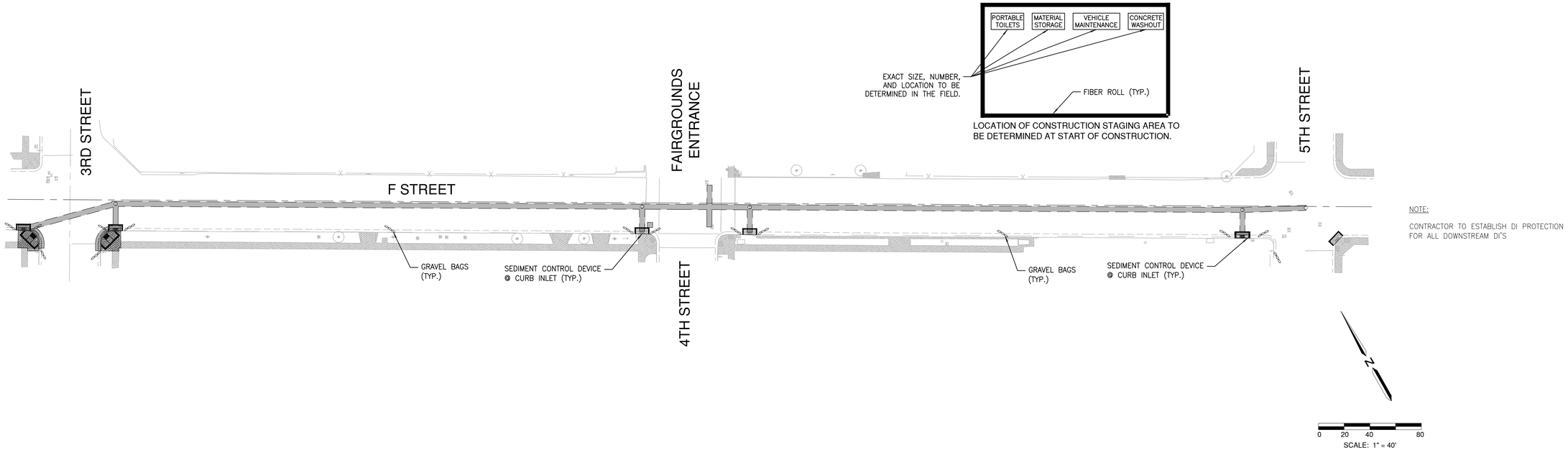

NOTE:

CONTRACTOR TO ESTABLISH DI PROTECTION FOR ALL DOWNSTREAM DI'S

EROSION CONTROL NOTES:

THIS PLAN PROVIDES EROSION CONTROL AND SEDIMENTATION INFORMATION AND DESIGN USING THE FOLLOWING ASSUMPTIONS:

*GROUND HAS BEEN ROUGH GRADED

CONTRACTOR SHALL ADJUST THE SEDIMENTATION AND EROSION CONTROL METHODS AS THE PROJECT DEVELOPS. IT SHALL BE THE QUALIFIED SWPPP PRACTITIONER'S (QSP) RESPONSIBILITY TO ENSURE THAT THE INSTALLED EROSION CONTROL AND SEDIMENTATION IMPROVEMENTS ARE IN CONFORMANCE WITH THE STATE OF CALIFORNIA STORM WATER POLLUTION PREVENTION PLAN GUIDELINES AND THE CALIFORNIA BEST MANAGEMENT PRACTICES.

WINTERIZATION NOTES

ALL MATERIALS NECESSARY FOR WINTERIZATION SHALL BE AVAILABLE AT THE SITE COMPLETED BY OCTOBER 15.

WINTERIZATION SHALL BE INSTALLED ACCORDING TO THIS PLAN AND AS DIRECTED BY THE QUALIFIED SWPPP PRACTITIONER (QSP).

EACH FIBER ROLL SHALL BE SECURELY HELD WITH 1"X1"X18" STAKES.

IF ANY GRAVEL BAGS ARE MOVED AND/OR RELOCATED IN GAINING ACCESS TO THE SITE DURING THE WINTER MONTHS, THEY SHALL BE REPLACED IF THEY ARE NO LONGER STABLE. ONCE INSTALLED, ALL WINTERIZATION MATERIALS SHOULD BE CHECKED BEFORE EACH WEEKEND AND EACH STORM.

THIS PLAN IS INTENDED TO BE USED FOR EROSION CONTROL ONLY. OTHER INFORMATION SHOWN HEREIN MAY NOT BE THE MOST CURRENT.

AFTER THE UNDERGROUND STORM DRAIN SYSTEM IS INSTALLED, THE CATCH BASINS WILL BE INSTALLED (AS SOON AS PRACTICAL) AND THE SEDIMENT CONTROL DEVICE WILL BE PLACED AROUND THOSE CATCH BASINS AS SHOWN ON THIS PLAN AND IN THE DETAIL ON THE SHEET UNTIL THE SITE IS PAVED.

SEDIMENT CONTROL DEVICES

CONTRACTOR TO PROVIDE TEMPORARY SEDIMENT CONTROL DEVICE AT CATCH BASINS AS SHOWN IN DETAIL. CONTRACTOR MAY SUBSTITUTE OTHER SEDIMENT CONTROL DEVICES (GRAVEL BAGS, SILT TRAPS, ETC.) UNDER THE DIRECTION OF THE QSP. MODIFICATIONS TO THIS PLAN NEED TO BE APPROVED BY QSD, AND LOGGED IN THE SWPPP AMENDMENT LOG.

DUST CONTROL MEASURES

CONTRACTOR TO PRACTICE DUST CONTROL MEASURES IN ACCORDANCE WITH THE CITY OF LOS BANOS STANDARDS THROUGHOUT CONSTRUCTION.

EROSION CONTROL LEGEND

= FIBER ROLL

= GRAVEL BAGS

= SEDIMENT CONTROL DEVICE AT CURB INLET

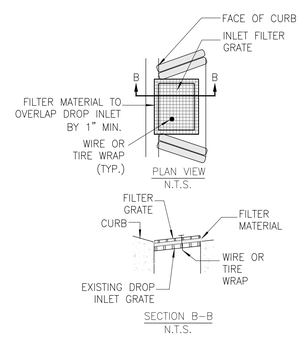

SEDIMENT CONTROL DEVICE @ CURB INLET DETAIL

N.T.S.

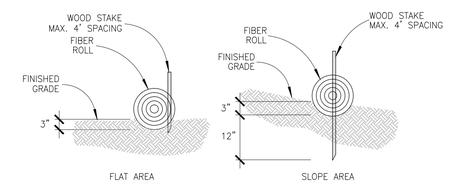

ENTRENCHMENT DETAIL FOR FIBER ROLL

N.T.S.

PLAN REVISIONS

NO.	DATE	REVISION
NO.		

O'DELL ENGINEERING
Modesto Palo Alto Pleasanton
1165 Scenic Drive, Suite B
Modesto, CA 95350
Ph 209.571.1765 odellengineering.com

IMPROVEMENT PLAN
F STREET STORM LINE
FROM 3RD STREET TO 5TH STREET

LOS BANOS CALIFORNIA

EROSION CONTROL PLAN

REGISTERED PROFESSIONAL ENGINEER MICHAEL P. PERSAK No. C44908 Exp. 12/31/16 CIVIL STATE OF CALIFORNIA

APPROVED:

DESIGNED:	MP
DRAWN:	EV
CHECKED:	MP
SCALE:	1" = 40'
DATE:	4/28/2016
JOB NO.:	27916
FILE NO.:	27916-EC.dwg

SHEET NO.
8
OF
8

CALL BEFORE YOU DIG USA 800-227-2600

H:\27916-Los Banos Storm Drain Line\Civil\ConstPlans ACAD 2014\27916-EC.dwg 08:05:03 05/03/2016