City of Los Banos
At the Crossroads of California

Contract Documents
for
Construction of

LOS BANOS CITY HALL
ADA COUNTERS

OCTOBER 2020

Prepared By

EST. 1968
PROVOST& PRITCHARD
CONSULTING GROUP
An Employee Owned Company

4701 Sisk Road, Suite 102
Modesto, CA 95356-9320

REGISTERED PROFESSIONAL ENGINEER
DENA R. TRAINA
No. 35,580
Civil
STATE OF CALIFORNIA

DATE SIGNED October 6, 2020

Bid Proposals must be received no later than 2:00 p.m. November 5, 2020
City of Los Banos City Clerk
520 J Street
Los Banos, CA 93635

City of Los Banos
Public Works Department

This Page is Intentionally Left Blank

Table of Contents

Advertisement for Bids

Information for Bidders

Bid

Bid Bond

Sample Forms

Agreement
Certificate of Contractor
Payment Bond
Performance Bond
Notice of Award
Notice to Proceed
Change Order

General Provisions

1. Terms and Definitions
2. Order of Precedence of Contract Documents
3. Venue
4. Giving Notice
5. Cumulative Remedies
6. Non-Discrimination
7. Non-Discrimination of the Disabled
8. Additional Instructions and Detail Drawings
9. Schedules, Reports and Records
10. Drawings and Specifications
11. Shop Drawings, Product Data and Samples
12. Materials, Services and Facilities
13. Inspection and Testing
14. Substitutions
15. Patents
16. Surveys, Permits and Regulations
17. Protection of Work, Property and Persons
18. Supervision by Contractor
19. Changes in the Work
20. Changes in Contract Price
21. Time for Completion and Liquidated Damages
22. Correction of Work
23. Suspension of Work, Termination and Delay
24. Progress Estimates
25. Progress Payments
26. Prompt Payment
27. Acceptance and Final Payment
28. Quantities and Unit Prices
29. Insurance
30. Contract Security
31. Assignments
32. Indemnification
33. Separate Contracts
34. Subcontracting
35. Employment of Apprentices
36. Payment of Prevailing Wages

37. Registration to Train Apprentices
38. Penalties
39. Engineer's Authority
40. Land and Rights-of-Way
41. Warranty and Guarantee
42. One (1) Year Warranty Period
43. Correction of Defective Work
44. Early Completion
45. Extended Warranties and Guarantees
46. Arbitration
47. Taxes
48. Contractor's Understanding
49. Accidents
50. Safety and Sanitation
51. Climatic Conditions
52. Officials Not to Benefit
53. Clean-Up
54. Notice to Owner
55. Payment of Withheld Funds
56. Storm Water Pollution Prevention Measures

Special Provisions

1. Requirements
2. Description of Work
3. Commencement, Prosecution and Completion of Work
4. Hours of Work
5. City Permits and Business Licenses
6. Testing
7. Responsibility Regarding Existing Utilities and Private Property
8. Obstructions
9. Materials Furnished By Owner
10. Materials Furnished By Contractor
11. Schedule of Values, Material List and Substitutions
12. Request for Extension of Time
13. Rights-of-Way
14. Coordination with Other Work
15. Disposal of Waste Materials
16. Noise Control
17. Water Supply
18. Notifications
19. Work Not Listed in Proposal
20. Submittals
21. Bid Item Descriptions

General Requirements

01 11 00 Description of Work and Schedule Constraints
01 11 05 Engineer's Status During Construction
01 11 10 Coordination of Work
01 22 00 Explanation of Bid Items
01 33 00 Submittal Procedures
01 33 01 Master List of Submittals
01 35 00 Materials and Substitutions
01 43 00 Quality Control and Testing
01 77 00 Contract Closeout
01 81 19 Construction Indoor Air Quality and Noise Control

Technical Specifications

26 00 00 Electrical

See Plans for remaining Technical Specifications

This Page is Intentionally Left Blank

Advertisement for Bids

CITY OF LOS BANOS
520 J Street
Los Banos, California 93635

Notice is hereby given that separate sealed bids for the award of contract for the **Construction of Los Banos City Hall ADA Counters** will be received by the City of Los Banos at the office of the City Clerk until 2:00 p.m. Pacific Standard Time, November 5, 2020 and then at said office publicly opened and read aloud.

The major work consists of demolishing two counters at City Hall and installing two new ADA counters.

The time for completion is forty (40) calendar days including 30 days of preparatory work and 10 days of construction.

The Contract Documents, in their entirety, can be viewed and/or obtained from the City of Los Banos website at www.losbanos.org or at the following locations:

Central California Builders Exchange (www.cencalbx.com)
Builders Exchange of Stockton (www.besonline.com)
Valley Builders Exchange, Inc. (www.valleybx.com)
Dodge Data & Analytics (www.construction.com/plans/)

A payment bond prepared and executed in accordance with California Civil Code Section 9550 and a bond for faithful performance of the contract will be required of the successful bidder who is awarded the contract.

The successful bidder must comply with the latest general prevailing rate of per diem wages as determined by the Director of Industrial Relations, State of California, Department of Industrial Relations and is to be paid to the various craftsmen and laborers required to construct said improvements and is made a part of the specifications and contract for said work to which reference is hereby made for further particulars.

No contractor or subcontractor may be listed on a bid proposal or awarded a contract for public work on a public works project unless registered with the Department of Industrial Relations pursuant to Labor Code section 1725.5.

This project is subject to compliance monitoring and enforcement by the Department of Industrial Relations. Contractor registration information can be found at:

http://www.dir.ca.gov/Public-Works/PublicWorks.html

Each bid shall be accompanied by cashier's or certified check or by a bidder's bond, made payable to the City of Los Banos and executed by a corporate surety licensed to issue surety bonds in the State of California, for an amount equal to at least ten percent (10%) of the amount of said bid and no bid shall be considered unless such cashier's or certified check or bidder's bond is enclosed therewith.

The successful bidder of this project shall have the following current and active California State Contractor's License at the time of the submission of the bid and throughout the duration of the contract: **Class B**.

Prospective bidders are required to attend a mandatory pre-bid meeting on October 21, 2020.

Bids will not be considered from bidders who were not physically in attendance at the mandatory pre-bid meeting.

Bidders shall refer to the Contract Document's Information for Bidders for complete instructions.

Bidders are solely responsible for the cost of preparing their bids.

The City specifically reserves the right, in its sole discretion, to reject any or all bids, to re-bid, or to waive inconsequential defects, in bidding not involving time, or quality of the work. The City may reject any and all bids and waive any minor irregularities in the bids.

This Page is Intentionally Left Blank

Information for Bidders

Sealed bids will be received by the City of Los Banos (herein called the "Owner"), at the office of the City Clerk until 2:00 p.m. Pacific Standard Time (PST), on November 5, 2020, then at said office, publicly opened and read aloud. Owner shall reject all bids received after the specified time and will return such bids to bidder, unopened. Bidders must submit bids in accordance with these instructions. No emailed or faxed bids will be accepted.

The major work consists of demolishing and installing two ADA accessible counters at City Hall. The time for completion is forty (40) calendar days including 30 days of preparatory work (including coordinating with the City regarding the closing of the work areas, preparing submittals, submittal review time, ordering materials, etc.) and 10 days of construction.

Each bid must be submitted in a sealed envelope and addressed to the City of Los Banos at 520 J Street, Los Banos, CA 93635. Each sealed envelope containing a bid must be plainly marked on the outside as "**LOS BANOS CITY HALL ADA COUNTERS: Attention City Clerk**", and the envelope shall also bear on the outside, the name of the bidder, and their address. If forwarded by mail, the sealed envelope containing the bid must be enclosed in another envelope addressed to the City of Los Banos at 520 J Street, Los Banos, CA, 93635, and also clearly state, "**LOS BANOS CITY HALL ADA COUNTERS: Attention City Clerk**".

A complete bid includes the Bid Form, List of Subcontractors, Equal Employment Opportunity, Non-Collusion Affidavit, Debarment and Suspension Certification, Bid Schedule, Experience, Bid Bond with surety, and a copy of a current California State Contractor's License. A signed Addendum, if issued, must also be submitted with the sealed bid. The Total Bid Amount must be filled in, in ink or typewritten, and the bid must be fully completed and executed when submitted. Only one set of original bid forms are required to be submitted. Mistakes must be corrected, and the correction inserted; correction must be initialed in ink by person or persons signing the bid. No conditional bids will be accepted.

The bid shall be signed by a person or persons legally authorized to bind bidder to the contract. The individual or individuals signing each document shall warrant that they are authorized to bind the bidder.

The Owner may waive any informalities or minor defects or reject any and all bids. Any bid may be withdrawn prior to the above scheduled time for the opening of bids or authorized postponement thereof. Any bid received after the time and date specified shall not be considered. No bidder may withdraw a bid within 30 days after the actual date of the opening thereof. Should there be reasons why the contract cannot be awarded within the specified period, the time may be extended by mutual agreement between the Owner and the bidder.

Each bid must be accompanied by a bid bond payable to the Owner for ten percent (10%) of the total amount of the bid. As soon as the bid amounts have been compared, the Owner will return the bid security of all except the three lowest responsive and responsible bidders. Once a bid has been awarded, and the payment bond and performance bond of the successful bidder has been received by the Owner, the bid security of the three remaining lowest responsive and responsible bidders will be returned.

All bonds must be acknowledged before a Notary Public by both the bidder and the surety. Attorneys-in-fact who sign bid bonds or payment bonds and performance bonds must file with each bond a certified and effective dated copy of their power of attorney.

Pre-Bid Meeting

Prior to submitting a sealed bid, bidder will attend a mandatory pre-bid meeting at the project site. The date of the mandatory pre-bid meeting is October 21, 2020. The address for the mandatory meeting is 520 J St, Los Banos, CA 93635 in Los Banos, California. The start time for the meeting is 10 a.m., sharp.

Bids will not be considered from bidders who were not physically in attendance at the mandatory pre-bid meeting.

Award and Execution of Contract

The party to whom the contract is awarded will be required to execute the Agreement, and obtain the performance bond and payment bond along with satisfactory evidence of insurance within ten (10) calendar days from the date when the Notice of Award is delivered to the successful bidder. The Notice of Award shall be accompanied by the necessary agreement and bond forms. In case of failure of the bidder to execute the Agreement, the Owner may, at his option, consider the bidder in default, in which case the bid bond accompanying the bid shall become the property of the Owner.

A performance bond and a payment bond, each in the amount of 100 percent of the Contract Price, with a corporate surety named on the current list of "Surety Companies Acceptable on Federal Bonds" as published in the Treasury Department Circular Number 570, will be required for the faithful performance of the contract. The payment bond must be issued by an admitted surety insurer holding a certificate of authority to transact surety insurance in California issued by the Insurance Commissioner.

All bonds must be acknowledged before a Notary Public by both the bidder and the surety. Attorneys-in-fact who sign bid bonds or payment bonds and performance bonds must file with each bond a certified and effective dated copy of their power of attorney.

The Owner, within 15 days of receipt of the performance bond, payment bond and agreement signed by the party to whom the contract was awarded, shall sign the Agreement and return to such party an executed duplicate of the agreement. Should the Owner not execute the Agreement within such period, the bidder may, by written notice, withdraw his signed Agreement. Such notice of withdrawal shall be effective upon receipt of the notice by the Owner.

The Notice to Proceed shall be issued within 10 days of the execution of the Agreement by the Owner. Should there be reasons why the Notice to Proceed has not been issued within such period, the time may be extended by mutually agreed upon, and the bidder may terminate the Agreement without further liability on the part of either party.

All applicable laws, ordinances, and the rules and regulations of all authorities having jurisdiction over construction of the project shall apply to the Contract throughout.

Subcontractors

The subcontractors listed by bidder in the bid shall list therein the name and address of each subcontractor to whom the bidder proposes to subcontract portions of the work in an amount in excess of one-half of one percent of the total bid or $10,000, whichever is greater, in accordance with the Subletting and Subcontracting Fair Practices Act, commencing with Section 4100 of the Public Contract Code. The bidder's attention is invited to other provisions of the Act related to the imposition of penalties for a failure to observe its provisions by using unauthorized subcontractors or by making unauthorized substitutions.

Registration with California Department of Industrial Relations (DIR)

A contractor or subcontractor shall not be qualified to bid on, be listed in a bid proposal, subject to the requirements of Section 4104 of the Public Contract Code, or engage in the performance of any contract for public work, as defined in this chapter, unless currently registered and qualified to perform public work pursuant to Section 1725.5. It is not a violation of this section for an unregistered contractor to submit a bid that is authorized by Section 7029.1 of the business and Professions Code or by Section 10164 or 20103.5 of the Public Contract Code, provided the contractor is registered to perform public work pursuant to Section 1725.5 at the time the contract is awarded. Labor Code Section 1771.1(a) requires contractors and their subcontractors to possess and maintain such registration with DIR in order to be awarded and to perform on public works projects (regardless of funding source).

Pursuant to Section 1771.4, each contractor and subcontractor shall furnish certified payroll records to the Labor Commissioner at least monthly and in a format prescribed by the Labor Commissioner of the DIR. Until such time that the DIR gives awarding agencies direct access to all certified payrolls submitted by contractors and subcontractors, contractor and his subcontractors are also required to submit copies of payroll records to Owner on a monthly basis. Information on the above can be found at:

http://www.dir.ca.gov/Public-Works/PublicWorks.html

Prevailing Wage

This work is subject to prevailing wage requirements. If there is a difference between the minimum wage rates predetermined by the Secretary of Labor and the prevailing wage rates determined by the Director of the Department of Industrial Relations of the State of California for similar classification of labor, the contractor and his subcontractor shall not pay less than the higher wage rate. In accordance with the provisions of Section 1773 of the Labor Code of the State of California, the Owner has obtained from the Director of the Department of Industrial Relations, the general prevailing rate for each craft, classification, or type of workman required for execution of the Agreement. A copy of said prevailing rate of per diem wages is on file in the office of the Owner, and available from the California Department of Industrial Relations' Internet web site at **http://www.dir.ca.gov/DLSR/PWD**.

The Federal minimum wage rates for this work as predetermined by the United States Secretary of Labor may be examined at the offices described above where the Contract Documents may be seen. Addenda to modify the Federal minimum wage rates, if necessary, will be posted on the internet at **www.losbanos.org**. Future effective general prevailing wage rates, which have been predetermined are on file with the California Department of Industrial Relations and are referenced but not printed in the general prevailing wage rates.

Bidders must satisfy themselves as to the accuracy of the estimated quantities in the Bid Schedule by examination of the site and a review of the drawings and specifications including addenda. After bids have been submitted, the bidder shall not assert that there was misunderstanding concerning the quantities of work or the nature of the work to be done. The failure or omission of any bidder to do any of the foregoing shall not relieve any bidder from any obligation with respect to his bid.

The Contract Documents contain the provisions required for the construction of the project. The Owner will not be responsible for, nor be bound by, any oral instructions, interpretations, or explanations issued by the Owner or its representatives. Any request for clarifications or questions of the Contract Documents shall be made in writing or email and deliverable to:

City of Los Banos Public Works Department
Attn: Fred Pezeshk
fred.pezeshk@losbanos.org
411 Madison Avenue
Los Banos, CA 93635

Requests for clarification or questions shall be delivered to the Owner before 5:00 p.m. PDST on October 27, 2020. Any Owner response to a request for clarification, questions and answers will be posted to the City's website at www.losbanos.org no later than 5:00 p.m. PDST on October 29, 2020 and if necessary, shall become a part of the bid as an addendum.

Proposed timeline of events associated with the awarding of bid:

Release of Advertisement for Bid		October 12, 2020
Pre-Bid Meeting – On Site - Mandatory	10:00 a.m.	October 21, 2020
Deadline to Submit Questions/Clarifications	5:00 p.m.	October 27, 2020
Addendum/Questions/Clarifications posted	5:00 p.m.	October 29, 2020
Bid Opening	2:00 p.m.	November 5, 2020
City Council Considers Bid	7:00 p.m.	November 18, 2020
Issuance of a Notice of Award	On or before	November 19, 2020
Issuance of a Notice to Proceed	On or before:	December 3, 2020 (tentative)
Construction to Begin	On or before:	December 13, 2020 (tentative)

Qualification of Bidder

The Owner may make such investigation as it deems necessary to determine the ability of the

bidder to provide the services requested, and the bidder shall furnish to the Owner all information and data for this purpose as the Owner may request. The Owner reserves the right to reject any bid should the evidence submitted by, or investigation of, the bidder fail to satisfy the Owner that such bidder is properly qualified to carry out the obligations of the bid and to complete the requirements contemplated therein.

Governing Law and Venue

This bid, or any contract that may result from the award of this bid, shall be deemed to be made under, and shall be governed by and construed in accordance with, the laws of the State of California. Any action brought to enforce the terms, or provision of this bid or any contract that may result from the award of this bid, shall have venue in the County of Merced, State of California.

Mandatory Bid Protest Procedure

The lack of prompt procedure to resolve disputes regarding the bidding process would impair the Owner's ability to carry out its purpose of contracting this project in a timely manner. Therefore, to the maximum extent authorized by law and notwithstanding any other procedures specified in these Contract Documents, all disputes and/or protests regarding the bidding process shall be subject to the following procedure. In submitting a bid to the Owner for this work, the bidder agrees to comply with and to be bound by this procedure.

Any bid protest must be submitted in writing to the Owner before 5:00 p.m. on the fifth (5th) business day following bid opening.

1. The initial protest document must contain a complete statement of the basis for the protest, and all supporting documentation. A non-refundable fee of One Thousand Dollars ($1,000.00) made payable to the "City of Los Banos" shall accompany the protest documents and will be used by the Owner to recover costs in evaluating the bid protest. A bid protest submitted without the requisite fee shall not be considered by the Owner.
2. The party filing the protest must have actually submitted a bid for the work. A subcontractor of a party submitting a bid for the work may not submit a bid protest. Only bidders who the Owner otherwise determines are responsive and responsible are eligible to protest a bid.
3. A party may not rely on the bid protest submitted by another bidder but must timely pursue its own protest.
4. The protest must refer to the specific portion of the Contract Documents which forms the basis for the protest.
5. The protest must include the name, address and telephone number of the person representing the protesting party.
6. The party filing the protest must concurrently transmit a copy of the initial protest document and any attached documentation to all other parties with a direct financial interest which may be adversely affected by the outcome of the protest. Such parties shall include all other bidders who appear to have a reasonable prospect of receiving an award depending upon the outcome of the protest.
7. The Owner will give the protested bidder five (5) business days after the receipt of the protest to submit a written response. The responding bidder shall transmit the response to the protesting bidder concurrent with the delivery to the Owner.
8. The procedure and time limits set forth in this paragraph are mandatory and are the bidder's sole and exclusive remedy in the event of bid protest. The bidder's failure to comply with these procedures shall constitute a waiver of any right to further pursue the bid protest, including filing a Government Code Claim or legal proceedings.

If the Owner determines that a protest is frivolous, the protesting bidder may be determined to be non-responsive and/or non-responsible and that bidder may be determined to be ineligible for future

contract awards.

Cancellation of Contract

The Owner may terminate any contract derived from this bid as follows:

- WITHOUT CAUSE at any time by giving thirty (30) calendar days written notice to the successful bidder.
- WITH CAUSE (Default) at any time by giving ten (10) calendar days written notice to the successful bidder. Cancellation for cause shall be at the discretion of the Owner and shall be, but is not limited to, failure to supply the items, materials, equipment or services specified within the time allowed or within the terms, conditions or provisions of this bid. The successful bidder may not cancel any contract derived from this bid, without prior written consent of the Owner.

This Page is Intentionally Left Blank

Bid Form

TO: City of Los Banos
520 J Street
Los Banos, CA 93635

In compliance with the Advertisement for Bids the undersigned, as bidder, hereby offers to provide to the Owner, in accordance with the terms and conditions in the provisions set forth in the Contract Documents the stated total bid amount quoted on this Bid Form for the work of

LOS BANOS CITY HALL ADA COUNTERS

Total Bid Amount: $_____

_____
(Total Bid Amount in Written Form)

The undersigned certifies under penalty of perjury under the laws of the State of California and the United States of America, that the above quotation constitutes a bona-fide offer for the work, that undersigned is a duly authorized representative of the company listed, that the quotation is in no way sham or collusive, and that the executed Agreement between the bidder and Owner constitutes acceptance of bidder's total bid for the work stated in the Contract Documents. The undersigned has read the General Provisions, Special Provisions, and Technical Specifications in these Contract Documents. The undersigned further certifies, under penalty of perjury that the Non-Collusion Affidavit required by Title 23 United States Code, Section 112 and Public Contract Code Section 7106; and the Title 49 Code of Federal Regulations, Part 29 Debarment and Suspension Certification are true and correct.

The undersigned acknowledges receipt of the following addenda: _____

_____

Signature: _____ Date:_____

Print Name: _____Title: _____

Name of Business: _____

Doing business as: (*Circle One*): An Individual A Partnership A Corporation

Business Address: _____

Telephone No.:_____ Fax No.:_____

E-Mail Address: _____

License Number: _____ Class & Expiration Date: _____

List of Subcontractors

The bidder shall herein set forth the name and location of the place of business of each subcontractor who will perform work or labor or render services to the bidder in or about the construction of the work in an amount in excess of one-half of one percent of the bidder's total bid, and the portion of the work which will be done by each subcontractor (see Item 34 of the General Provisions). Attach additional sheets, if necessary.

Project: **LOS BANOS CITY HALL ADA COUNTERS**

The following work will be performed (or provided) by the following subcontractors, and coordinated by bidder:

Company Name	Address	License No.	Section of Work

Equal Employment Opportunity

Contractor hereby certifies that bidder and subcontractors

- ☐ Have
- ☐ Have Not

participated in a previous contract or subcontract subject to the equal opportunity clauses, as required by Executive Orders 10925, 11114, or 11246, and that, where required, have filed with the Joint Reporting Committee, the Director of the Office of Federal Contract Compliance, a Federal Government contracting or administering agency, or the former President's Committee on Equal Employment Opportunity, all reports due under the applicable filing requirements.

Note: The above certification is part of the bid. Signing this bid on the signature portion thereof shall also constitute signature of these certifications.

Non-Collusion Affidavit

PUBLIC CONTRACT CODE 7106

In conformance with Title 23 United States Code Section 112 and Public Contract Code 7106 the bidder declares that the bid is not made in the interest of, or on behalf of, any undisclosed person, partnership, company, association, organization, or corporation; that the bid is genuine and not collusive or sham; that the bidder has not directly or indirectly induced or solicited any other bidder to put in a false or sham bid, and has not directly or indirectly colluded, conspired, connived, or agreed with any bidder or anyone else to put in a sham bid, or that anyone shall refrain from bidding; that the bidder has not in any manner, directly or indirectly, sought by agreement, communication, or conference with anyone to fix the bid price of the bidder or any other bidder, or to fix any overhead, profit, or cost element of the bid price, or of that of any other bidder, or to secure any advantage against the public body awarding the contract of anyone interested in the proposed contract; that all statements contained in the bid are true; and, further, that the bidder has not, directly or indirectly, submitted his or her bid price or any breakdown thereof, or the contents thereof, or divulged information or data relative thereto, or paid, and will not pay, any fee to any corporation, partnership, company association, organization, bid depository, or to any member or agent thereof to effectuate a collusive or sham bid.

Debarment and Suspension Certification

TITLE 49, CODE OF FEDERAL REGULATIONS, PART 29

The bidder, under penalty of perjury, certifies that, except as noted below, he/she or any other person associated therewith in the capacity of owner, partner, director, officer, and manager:

- Is not currently under suspension, debarment, voluntary exclusion, or determination of ineligibility by any federal agency;
- Has not been suspended, debarred, voluntarily excluded or determined ineligible by any federal agency within the past 3 years;
- Does not have a proposed debarment pending; and
- Has not been indicted, convicted, or had a civil judgment rendered against it by a court of competent jurisdiction in any matter involving fraud or official misconduct within the past 3 years.

If there are any exceptions to this certification, insert the exceptions to an additional sheet of paper and include with the bid.

Exceptions will not necessarily result in denial of award, but will be considered in determining bidder responsibility. For any exception noted above, indicate on an additional sheet of paper to whom it applies, initiating agency, and dates of action.

NPDES/MS4 Compliance Certification

All construction projects within the City limits must comply with the National Pollutant Discharge Elimination System (NPDES) storm water regulation adopted by the EPA and the Phase II Small Municipal Separate Storm Sewer System (MS4) General Permit requirements, regardless of size.

The City is required under these permits to provide information to Contractors performing work within City limits about training opportunities to assist in managing potential pollutants from construction –related activities, selection, installation, implementation, and maintenance of Best Management Practices (BMPs), as well as overall program compliance. The City has provided such information and helpful links on their website at http://www.losbanos.org/city-government/departments/public-works/, under the Storm Water Management Plan tab.

The Bidder acknowledges that they are aware of the necessity to be in compliance with the NPDES and MS4 permits while working within City limits, and that information regarding such is available on the City's website.

Note: The above certifications are part of the bid. Signing this bid on the signature portion thereof shall also constitute signature of these certifications.

Experience

Bidder shall identify three (3) most recently completed projects similar to work described in these Contract Documents.

	1	2	3
Project Title			
Public Agency			
Address			
Telephone No.			
Engineer in Charge			
Project Value ($)			
Date Accepted			
Claims Filed?*			

* If yes, please explain below:

Bid Schedule
For
LOS BANOS CITY HALL ADA COUNTERS

Bidder agrees to perform all the work described in the Contract Documents for the following unit and lump sum prices and understands that the quantity of work shown is approximate only. The schedule shall be completed by the bidder with the unit and lump sum prices entered in numerals. The extensions shall be made by the bidder. In case of discrepancy between the unit prices and the extension thereof, the unit price shall be considered as correct when evaluating bids.

ITEM NO.	ITEM	QUANTITY AND UNIT		UNIT PRICE	AMOUNT
1	Mobilization and Demobilization	1	LS	$ _____	$ _____
2	Worker Protection	1	LS	$ _____	$ _____
3	Dust Control	1	LS	$ _____	$ _____
4	Demolition	1	LS	$ _____	$ _____
5	ADA Counter Construction (2)	1	LS	$ _____	$ _____
6	Bullet-Resistant Partition and Equipment (2)	1	LS	$ _____	$ _____
		TOTAL:		**$** _____	
A-1	Add Alternative No. 1 – Accelerate Schedule	1	LS	$ _____	$ _____

Note: The representations made herein are made under penalty of perjury. Any information contained in the bid which is proven false shall be considered nonresponsive and this bid shall be rejected.

This Page is Intentionally Left Blank

Bid Bond

We, _____

as Contractor, and _____

as Surety, jointly and severally, bind ourselves, our heirs, representatives, successors and

assigns, as set forth herein, to the **City of Los Banos** (herein called "Owner") for payment

of the penal sum of _____

_____Dollars ($_____),

lawful money of the United States. Contractor has submitted the accompanying bid proposal

for the construction of: **LOS BANOS CITY HALL ADA COUNTERS**

If the Contractor is awarded the contract and enters into a written agreement, in the form prescribed by the Owner, at the price designated by Bid Schedule, and files a payment bond and performance bond with the Owner, or substitute security in lieu thereof, in the time and manner specified by the Owner, and carries all insurance in type and amount which conforms to the General Provisions, Special Provisions, and Technical Specifications in these Contract Documents and furnishes required certificates and endorsements thereof, then this obligation shall be null and void; otherwise it shall remain in full force and effect.

Forfeiture of this bond, or any deposit made in lieu thereof, shall not preclude the Owner from seeking all other remedies provided by law to cover losses sustained as a result of the Contractor's failure to do any of the foregoing.

Contractor and Surety agree that if the Owner is required to engage the services of an attorney in connection with the enforcement of this bond, each shall pay Owner's reasonable attorney's fees incurred with or without suit.

Executed on _____, 20____

_____
Contractor

(Seal if Corporation)

By: _____

Title _____

[SIGNATURE SHEET CONTINUES ONTO NEXT PAGE]

Any claims under this bond may be addressed to:

_____ (name and address of Surety)

_____

_____

_____ (name and address of Surety's agent for service of process in California, if different from above)

_____

_____

_____

_____ (phone number of Surety's agent in California)

(Attach Acknowledgment)

_____
Surety

By _____
(Attorney-in-Fact)

Notice: No substitution or revision to this bond form will be accepted. Sureties must be authorized to do business in and have an agent for service of process in California.

All bond forms must be acknowledged before a Notary Public by both the Contractor and the Surety. Attorneys-in-fact who sign bond forms must file with each bond a certified and effective dated copy of their power of attorney.

Agreement

SAMPLE

Note: Particulars left blank in this sample will be filled with project specific information as outlined in these bid documents.

THIS Agreement is dated as of the _____day of _____in the year 20__ by and between the **City of Los Banos, a California municipal corporation** ("Owner") and [ENTER NAME AND TYPE OF ENTITY] ("Contractor").

Owner and Contractor, in consideration of the mutual covenants hereinafter set forth, agree as follows:

1. WORK. Contractor shall complete the work indicated in Owner's Contract Documents entitled "**LOS BANOS CITY HALL ADA COUNTERS**."

The work is generally described as follows:

- Construction of ADA Counters.
- Contractor shall furnish all of the material, supplies, tools, equipment, labor and other services necessary for the construction and completion of the work described herein.

2. CONTRACT TIME. Contractor shall commence the work required by the Contract Documents within 10 calendar days after the date of the Notice to Proceed and will complete the same within the time period set forth in the bid, unless the period for completion is extended otherwise by the Contract Documents.

3. LIQUIDATED DAMAGES. Owner and Contractor recognize that time is of the essence of this Agreement and that Owner will suffer financial loss if the work is not completed within the time specified in Paragraph 2 herein, plus any extensions thereof allowed in accordance with Paragraph 21, Time for Completion and Liquidated Damages, of the General Provisions. The parties also recognize the delays, expense and difficulties involved in proving in a legal proceeding the actual loss suffered by Owner if the work is not completed on time. Accordingly, instead of requiring any such proof, Owner and Contractor agree that as liquidated damages for delay (but not as a penalty) Contractor shall pay Owner One thousand Dollars ($ 1,000.00) for each day that passes after the time specified in Paragraph 2 herein.

4. CONTRACT PRICE. Owner shall pay Contractor for completion of the work in accordance with the Contract Documents in current funds the amount set forth in the Bid Schedule(s). The Contractor agrees to perform all of the work described in the Contract Documents for the unit and lump sum prices set forth in the Bid Schedule(s).

5. PAYMENT PROCEDURES. Contractor shall submit applications for payment in accordance with Paragraph 24, Progress Estimates, of the General Provisions. Applications for payment will be processed by Owner as provided in the General Provisions.

6. CONTRACT DOCUMENTS. The Contract Documents which comprise the entire agreement between Owner and Contractor concerning the work consists of this Agreement and the following attachments to this Agreement:

(A) Advertisement for Bids
(B) Information for Bidders

(C) Bid
(D) Bid Bond
(E) Agreement
(F) Payment Bond
(G) Performance Bond
(H) Notice of Award
(I) Notice to Proceed
(J) Change Order
(K) General Provisions
(L) Special Provisions
(M) Technical Specifications prepared by PROVOST & PRITCHARD CONSULTING GROUP AND HUBER & HUBER ARCHITECTS entitled "**LOS BANOS CITY HALL ADA COUNTERS**", dated October 6, 2020
(N) Drawings prepared by HUBER & HUBER ARCHITECTS totaling 6 sheets dated October 6, 2020.
(O) Addenda

No. _____, dated_____20__

No. _____, dated_____20__

There are no Contract Documents other than those listed in this Paragraph 6. The Contract Documents may only be amended by change order as provided in Paragraph 19, Changes in the Work, of the General Provisions.

7. MISCELLANEOUS.

A. Terms used in this Agreement which are defined in Paragraph 1 of the General Provisions will have the meanings indicated in the General Provisions.

B. No assignment by a party hereto of any rights under or interests in the Contract Documents will be binding on another party hereto without the written consent of the party sought to be bound; and specifically but without limitation monies that may become due and monies that are due may not be assigned without such consent (except to the extent that the effect of this restriction may be limited by law), and unless specifically stated to the contrary in any written consent to an assignment, no assignment will release or discharge the assignor from any duty or responsibility under the Contract Documents.

C. Owner and Contractor each binds itself, its partners, successors, assigns and legal representatives to the other party hereto, its partners, successors, assigns and legal representatives in respect of all covenants, agreements and obligations contained in the Contract Documents.

D. The Laws of the State of California shall govern this Agreement. Venue is Merced County. The provisions of this paragraph shall survive expiration or other termination of this Agreement regardless of the cause of such termination.

E. All bids become property of the Owner. All bids, including the accepted bid and any subsequent contract become public records per the requirements of the California Government Code, Sections 6250-6270, "California Public Records Act". Proprietary material must be clearly marked as such. Pricing and service elements of the successful bid are not considered proprietary information. The Owner will treat all information submitted in a bid as available for public inspection once the Owner has selected a contractor. If you believe that you have a legally justifiable basis under the California Public Records Act (Government Section 6250 et. seq.) for protecting the confidentiality of any information

contained within your bid, you must identify any such information, together with the legal basis of your claim in your bid. In order for the Owner to assess confidentiality of any such information on your behalf, you must request, execute and submit an Owner-prepared written agreement to defend and indemnify the Owner for any liability, costs, and expenses incurred in asserting such confidentiality as part of your bid. The final determination as to whether the Owner will assert your claim of confidentiality on your behalf shall be sole discretion of the Owner.

F. This Agreement shall not be interpreted in favor of any Party by virtue of said Party not having prepared this Agreement.

G. If any time period provided for in this Agreement ends on the day other than a Business Day, the time period shall be extended to the next Business Day.

IN WITNESS WHEREOF, Owner and Contractor have caused this Agreement to be executed the day and year first above written.

_____ By: _____

Date Authorized Representative of Owner

Title: _____

ATTEST:

_____

Lucille L. Mallonee
City Clerk

APPROVED AS TO FORM:

_____

William A. Vaughn
City Attorney

_____ By: _____

Date Authorized Representative of Contractor

Title: _____

(Seal if Corporation)

(Attach Acknowledgement for Authorized Representative of Contractor)

Certificate of Contractor

I, _____
(Name)

certify that I am a/the _____
(Title)

designate sole proprietor, partner in partnership, or corporate officer with Contractor License Number _____ in the entity named as Contractor in the foregoing Agreement. I hereby expressly certify that the name of the entity to which I am associated is

_____
(Company Name)

that this entity is in good standing and has complied with all applicable laws and regulations, and that I have been expressly authorized by the proper parties in this entity to execute the Agreement on behalf of the above-named entity.

ATTEST:

Signature:_____

This form must be acknowledged before a Notary Public. The acknowledgement must be attached.

Payment Bond

We, _____

as Contractor, and _____

as Surety, jointly and severally, bind ourselves, our heirs, representatives, successors and

assigns, as set forth herein, to the **City of Los Banos** (herein called “Owner”) for payment

of the penal sum of _____

_____Dollars ($ _____),

lawful money of the United States. Owner has awarded the contract and entered into an

Agreement with the Contractor for the construction of:

LOS BANOS CITY HALL ADA COUNTERS

If Contractor or any of his subcontractors fails to pay any of the persons named in Section 9100 of the California Civil Code, or amounts due under the Unemployment Insurance Code with respect to work or labor performed under the contract or during the one-year guarantee period, or for any amounts required to be deducted, withheld, and paid over to the Franchise Tax Board from the wages of employees of the Contractor and his subcontractors pursuant to Section 13020 of the Unemployment Insurance Code, with respect to such work and labor, then Surety will pay the same in an amount not exceeding the sum specified above, and also will pay, in case suit is brought upon this bond, such reasonable attorney's fees as shall be fixed by the court.

This bond shall insure to the benefit of any of the persons named in Section 9100 of the California Civil Code, so as to give a right of action to them or their assigns in any suit brought upon this bond.

Surety agrees that no change, extension of time, alteration, or addition to the terms of the Contract, or the work to be performed, or the Provisions shall in any way affect its obligation on this bond, and it does hereby waive notice thereof.

Contractor and Surety agree that should Owner become a party to any action on this bond that each will also pay Owner’s reasonable attorney's fees incurred therein in addition to the above sum.

[SIGNATURE SHEET BEGINS ON NEXT PAGE]

Executed in four original counterparts on: _____, 20_____

_____
Contractor

(Seal if Corporation) By: _____

Title: _____

(Attach Acknowledgment of Authorized Representative of Contractor)

Any claims under this bond may be addressed to:

_____ (name and address of Surety)

_____

_____

_____ (name and address of Surety's agent for service of process in California, if different from above)

_____

_____

_____

_____ (phone number of Surety's agent in California)

(Attach Acknowledgment)

_____
Surety

By _____
(Attorney-in-Fact)

Notice: No substitution or revision to this bond form will be accepted. Sureties must be authorized to do business in and have an agent for service of process in California.

All bond forms must be acknowledged before a Notary Public by both the Contractor and the Surety. Attorneys-in-fact who sign bond forms must file with each bond a certified and effective dated copy of their power of attorney.

Performance Bond

We, _____

as Contractor, and _____

as Surety, jointly and severally, bind ourselves, our heirs, representatives, successors and

assigns, as set forth herein, to the **City of Los Banos** (herein called "Owner") for payment

of the penal sum of _____

_____Dollars ($ _____),

lawful money of the United States. Owner has awarded the contract and entered into an

Agreement with the Contractor for the construction of:

LOS BANOS CITY HALL ADA COUNTERS

The condition of this obligation is such that if the Contractor shall in all things abide by and well and truly keep and perform the covenants, and agreements in the said Contract Agreement, and any alteration thereof made as therein provided, on his part to be kept and performed at the time and in the manner therein specified, and shall faithfully fulfill the one-year guarantee of all materials and workmanship, and shall indemnify and save harmless the Owner and the Owner's Representative, and their consultants, and each of their directors, officers, employees and agents, as therein stipulated, this obligation shall become null and void, otherwise, it shall be and remain in full force and effect.

This Performance Bond shall remain in full effect during the one-year guaranty period following the completion of the work.

Surety agrees that no change, extension of time, alteration, or addition to the terms of the General Provisions, Special Provisions, and Technical Specifications in these Contract Documents shall in anyway affect its obligation in the bond, and it does hereby waive notice thereof.

Contractor and Surety agree that if the Owner is required to engage the services of an attorney in connection with the enforcement of this bond, each shall pay Owner's reasonable attorney's fees incurred with or without suit, in addition to the above sum.

[SIGNATURE SHEET BEGINS ON NEXT PAGE]

Executed in four original counterparts on : _____, 20_____

_____
Contractor

(Seal if Corporation) By: _____

Title: _____

(Attach Acknowledgment of Authorized Representative of Contractor)

Any claims under this bond may be addressed to:

_____ (name and address of Surety)

_____

_____

_____ (name and address of Surety's agent for service of process in California, if different from above)

_____

_____

_____

_____ (phone number of Surety's agent in California)

(Attach Acknowledgment)

_____
Surety

By _____
(Attorney-in-Fact)

Notice: No substitution or revision to this bond form will be accepted. Sureties must be authorized to do business in and have an agent for service of process in California.

All bond forms must be acknowledged before a Notary Public by both the Contractor and the Surety. Attorneys-in-fact who sign bond forms must file with each bond a certified and effective dated copy of their power of attorney.

Notice of Award

To: _____ Date: _____

_____ Project: _____

_____ _____

The Owner has considered the bid submitted by you for the above described work dated_____, 20_____.

You are hereby notified that your bid has been accepted for the unit and lump sum prices set forth in the Bid Schedule totaling $_____.

You are required by the Information for Bidders to execute the Agreement and furnish the required Contractor's performance bond and payment bond within ten (10) calendar days for the date of this Notice to you.

Before the Notice to Proceed can be issued, all required certificates of insurance, as stated in Section 29 of the General Provisions, and a copy of your Los Banos Business License must be submitted.

If you fail to execute said Agreement and to furnish said bonds within ten days from the date of this Notice, said Owner will be entitled to consider all your rights arising out of the Owner's acceptance of your bid as abandoned and as a forfeiture of your Bid Bond. The Owner will be entitled to such other rights as may be granted by law.

You are required to return an acknowledged copy of this Notice of Award to the Owner.

_____
Owner

By _____

Title _____

ACCEPTANCE OF NOTICE

Receipt of the above Notice of Award is hereby acknowledged by
_____(Name of Contractor)_____

this _____ day of _____ ,20_____

By _____

Title _____

This Page is Intentionally Left Blank

Notice to Proceed

To: _____ Date: _____

_____ Project: _____

_____ _____

You are hereby notified to commence work in accordance with the Agreement dated _____, 20_____, on or before _____20_____, and you are to complete the work by _____, 20_____.

You are required to return an acknowledged copy of this Notice to Proceed to the Owner.

_____
Owner

By _____

Title _____

ACCEPTANCE OF NOTICE
Receipt of the above Notice to Proceed is hereby
acknowledged by
_____ (Name of Contractor) _____

this _____ day of _____ ,20_____

By _____

Title _____

This Page is Intentionally Left Blank

Change Order

Order No._____

Date: _____

Agreement Date:_____

Project: _____

Owner: _____

Contractor: _____

The following changes are hereby made to the Contract Documents:

Justification:

Change to Contract Price:

Original Contract Price: $ _____

Current Contract Price adjusted by previous Change Order: $ _____

The Contract Price due to this Change Order will be (increased) (decreased) by: $ _____

The new Contract Price including this Change Order will be: $ _____

Change to Contract Time:

The Contract Time will be (increased) (decreased) by calendar days. _____

The date for completion of all work will be: _____

The undersigned hereby agrees to the above-described amendment of the Agreement.

_____

Contractor

_____

Owner

This Change Order shall become a part of the Contract Documents only upon signature of both parties.

This Page is Intentionally Left Blank

General Provisions

1. Terms and Definitions

Wherever used in the Contract Documents, the following terms shall have the meanings indicated, which shall be applicable to both the singular and plural thereof:

Addenda - Written or graphic instruments issued prior to the execution of the Agreement which modify or interpret the Contract Documents, by additions, deletions, clarifications or corrections.

ANSI – American National Standards Institute, current designation as of the Bid date unless otherwise indicated.

ASME – American Society of Mechanical Engineers, current designation as of the Bid date unless otherwise indicated.

ASTM – American Society for Testing Materials, current designation as of the Bid date unless otherwise indicated.

AWWA – American Water Works Association, current designation as of the Bid date unless otherwise indicated.

Bid - The offer or proposal of the bidder submitted on the prescribed form setting forth the prices for the work to be performed.

Bidder - Any person, firm or corporation submitting a bid for the work.

Bonds - Bid, Performance and Payment Bonds and other instruments of security, furnished by the Contractor and his surety in accordance with the Contract Documents.

Change Order - A written order to the Contractor authorizing an addition, deletion or revision in the work within the general scope of the Contract Documents, or authorizing an adjustment in the contract price or contract time.

Completion - That date as certified by the Engineer when the construction of the project or a specified part thereof is sufficiently completed, in accordance with the Contract Documents, so that the project or specified part can be utilized for the purposes for which it is intended.

Contract Documents - the contract, including Advertisement for Bids, Information for Bidders, Bid, including Bid Representations and Certifications, Bid Bond, Agreement, Payment Bond, Performance Bond, Notice of Award, Notice to Proceed, Change Order, General Provisions, Special Provisions, Technical Specifications, Drawings, and Addenda.

Contract Price – The total monies payable to the Contractor under the terms and conditions of the Contract Documents.

Contract Time – The number of calendar or working days as stated in the Contract Documents for the completion of the work.

Contractor – The person, firm or corporation with whom the Owner has executed the Agreement.

Drawings – The part of the Contract Documents which shows the characteristics and scope of the work to be performed and which have been prepared or approved by the Engineer.

Engineer – City Engineer of the City of Los Banos, acting either directly or through properly authorized agents, such agents, acting within the scope of the particular duties entrusted to them.

Field Order – A written order effecting a change in the work not involving an adjustment in the contract price or an extension of the contract time, issued by the Engineer to the Contractor during construction.

IEEE – Institute of Electrical and Electronics Engineers, current designation as of the bid date unless otherwise indicated.

NEMA – National Electrical Manufacturers Association, current designation as of the bid date unless otherwise indicated.

Notice of Award – The written notice of the acceptance of the Bid from the Owner to the successful bidder.

Notice to Proceed – Written communication issued by the Owner to the Contractor authorizing him to proceed with the work and establishing the date of commencement of the work.

Owner – City of Los Banos.

Production Data – All illustrations, standard schedules, performance charts, instructions, brochures, diagrams and other information furnished by the Contractor to illustrate a material, product or system for some portion of the work.

Project – The undertaking to be performed as provided in the Contract Documents.

REA – Rural Electrification Association, current designation as of the bid date unless otherwise indicated.

Samples – Physical examples which illustrate materials, equipment or workmanship, and establish standards by which the work will be judged.

Shop Drawings – All drawings, diagrams, schedules and other data which are specifically prepared for the work by the Contractor, a subcontractor, manufacturer, supplier or distributor, to illustrate some portion of the work.

Specifications – A part of the Contract Documents consisting of written descriptions of a technical nature of materials, equipment, construction systems, standards and workmanship.

Standards - City of Los Banos Standard Specifications, The Standard Specifications of the Department of Transportation of the State of California (Caltrans) dated 2010 and subsequent updates to that 2010 edition, and The Standard Plans of the Department of Transportation of the State of California (Caltrans) dated 2010 and subsequent updates to this 2010 edition.

Subcontractor – An individual, firm or corporation having a direct contract with the Contractor or with any other subcontractor for the performance of a part of the work at the site.

Supplier – Any person or organization who supplies materials or equipment for the work, including that fabricated to a special design, but who does not perform labor at the site.

Work – All labor necessary to produce the construction required by the Contract Documents, and all materials and equipment incorporated or to be incorporated in the project.

Written Notice – Any notice to any party of the Agreement relative to any part of this Agreement in writing and considered delivered and the service thereof completed, when posted by certified or registered mail to the said party at his last given address, or delivered in person to said party or his authorized representative on the work.

2. Order of Precedence of Contract Documents

In resolving conflicts resulting from errors or discrepancies in any of the Contract Documents, the order of precedence shall be as follows:

1. Permits from other agencies as may be required by law
2. Change orders
3. Agreement
4. Addenda
5. Contractor's Bid (Bid Form)
6. Advertisement for Bids
7. Information for Bidders
8. Supplementary General Conditions
9. General Provisions
10. Special Provisions
11. Technical Specifications
12. Drawings
13. Referenced Standard Specifications

If the conflicts cannot be resolved by the precedence prescribed above, the most stringent requirements shall prevail.

3. Venue

Contractor, and any subcontractor, supplier and any other person or organization performing any part of work, agree that each of them will waive jurisdiction and venue and shall submit to the jurisdiction of the courts of the State of California in the County of Merced, regardless of residence or domicile, with respect to any actions or suits at law or in equity arising under or related to the bidding, award or performance of the work or with regard to any matter whatsoever arising out of or relating to the validity, construction, interpretation or reinforcement of the Agreement as against Owner or any of their consultants, and/or any of their respective directors, officers, employees, representatives or agents.

4. Giving Notice

Whenever any provision of the Contract Documents requires the giving of written notice, it will be deemed to have been validly given if delivered in person to the individual or to a member of the firm or to an officer of the corporation for whom it is intended, or if delivered at or sent by registered or certified mail, postage prepaid, to the last business address known to the giver of the notice.

5. Cumulative Remedies

The duties and obligations imposed by these General Provisions and the rights and remedies available hereunder to the parties hereto, and, in particular but without limitation, the warranties, guarantees and obligations imposed upon Contractor by the General Provisions and all of the rights and remedies available to Owner thereunder are in addition to, and are not to be construed in any way as a limitation of, any rights and remedies available to any or all of them which are otherwise imposed or available by laws or regulations, by special warranty or guarantee or by other provisions of the Contract Documents, and the provisions of this paragraph will be as effective as if repeated specifically in the Contract Documents in connection with each particular duty, obligation, right and remedy to which they apply.

6. Non-discrimination

During the performance of the project, Contractor and subcontractors shall not unlawfully discriminate

against any employee or applicant for employment because of race, color, ancestry, religion, sex, national origin, marital status, age, medical condition (cancer related), physical handicap (including AIDS), or sexual orientation. Equal employment extends, but is not limited to recruitment, compensation, benefits, layoff, termination, and all other conditions of employment. Contractor and subcontractors shall ensure that the evaluation/treatment of their employees and applicants for employment are free of such discrimination. Contractor and subcontractors shall comply with the provisions of the Fair Employment and Housing Act (Government Code, Section 12900 et seq.) and the applicable regulations promulgated there under (California Administrative Code, Title 2, Section 7285.0 et seq.). The applicable regulations of the Fair Employment and Housing Commission implementing Government Code, Section 12900, set forth in Chapter 5 of Division 4 of Title 2 of the California Administrative Code and incorporated into this agreement by reference and made a part hereof as if set forth in full.

Contractor and any subcontractors shall give written notice of their obligations under this clause to labor organizations with which they have a collective bargaining or other agreement.

Contractor shall include the nondiscrimination and compliance provisions of the clause in all subcontracts to perform work under the contract.

Contractor shall grant access by representative of the Department of Fair Employment and Housing and the Owner upon reasonable notice at any time during normal business hours, but in no case less than twenty-four (24) hours notice, to such of its books, records, accounts, other sources of information and its facilities as said Owner shall require to ascertain compliance with this clause.

7. Non-discrimination of the Disabled

The Owner will not aid or perpetuate discrimination against a qualified disabled individual by funding as an agency, organization, or person that discriminates on the basis of handicap in providing aid, benefit, or service to beneficiaries of the program or activity. The Owner is committed to provide access to all Owner services, programs, and meetings open to the public for people with disabilities. In this regard the Owner and all of its vendors and Contractor will take all reasonable steps to ensure that disabled individuals have the maximum opportunity for the same level of aid, benefit, or service as any other individual.

8. Additional Instructions and Detail Drawings

The Contractor may be furnished additional instructions and detail drawings by the Engineer, as necessary to carry out the work required by the Contract Documents. The additional drawings and instructions thus supplied will become a part of the Contract Documents. The Contractor shall carry out the work in accordance with the additional detail drawings and instructions.

9. Schedules, Reports and Records

The Contractor shall submit to the Owner such schedules, reports, records and other data as the Owner may request concerning work performed or to be performed.

Prior to the first partial payment estimate, the Contractor shall submit schedules showing the order in which he proposed to carry on the work, including dates at which he will start the various parts of the work, estimated date of completion of each part and, as applicable:

A. A detailed cost breakdown of the work under each bid item awarded. The breakdown, after receiving favorable review by the Engineer, will become the basis for partial payment determination. Elements of work shall be grouped by building, structure, pipeline, system, etc. Within each grouping, work shall be itemized by readily measurable quantities of work completed in place. For example, concrete should be in units of cubic yard including form work and reinforcing steel. Mobilization costs, bond and insurance costs, and overhead costs shall not be prorated over items of work. In the event the cost breakdown is not favorably reviewed by the Engineer, another cost breakdown shall be submitted that is mutually acceptable to the Contractor and the Engineer.

B. The dates at which special detail drawings will be required; and respective dates for

submission of shop drawings, the beginning of manufacture, the testing and the installation of materials, supplies and equipment. The Contractor shall also submit a schedule of payments that he anticipates he will earn during the course of the work.

10. Drawings and Specifications

The intent of the drawings and specifications is that the Contractor shall furnish all labor, materials, tools, equipment, and transportation necessary to complete the project in an acceptable manner, ready for use, occupancy or operation by the Owner.

In case of conflict between the drawings and specifications, the specifications shall govern. Figure dimensions on drawings shall govern over scale dimensions and detailed drawings shall govern over general drawings.

Any discrepancies found between the drawings and specifications and site condition or any inconsistencies or ambiguities in the drawings or specifications shall be immediately reported to the Engineer, in writing, who shall promptly correct such inconsistencies or ambiguities in writing. Work done by the Contractor after his discovery of such discrepancies, inconsistencies or ambiguities shall be done at the Contractor's risk.

The Owner will furnish to the Contractor, free of charge, six copies of drawings and specifications for the work. The Contractor shall keep one copy of all current drawings and specifications on the job site, in good order, available to the Engineer and his representatives.

All drawings, specifications, and copies thereof furnished by the Owner are the property of the Owner. They are not to be used on other work, and, with the exception of the signed contract set, are to be returned to the Owner on request, at the completion of the work.

11. Shop Drawings, Production Data and Samples

The Contractor shall review, approve and submit to the Engineer all Shop Drawings, Production Data and Samples as may be necessary for prosecution of the Work and as required by the Contract Documents. The Contractor shall review and approve all Shop Drawings, Production Data and Samples prior to submitting them to the Engineer. By approving and submitting Shop Drawings, Production Data and Samples, the Contractor represents that he has determined and verified all materials, measurements and criteria related thereto, and that he has checked and coordinated the information contained within such submittals with the requirements of the Contract Documents. Any Shop Drawing, Production Data or Sample submitted to the Engineer without having been approved by the Contractor will be returned unreviewed to the Contractor.

For each item where shop drawings, production data or samples are required, the Contractor shall submit a minimum of six approved sets, hard copies, or one set, electronically. The Engineer shall review all shop drawings, production data and samples and retain three sets after his review. The remaining sets shall be returned to the Contractor with actions defined as follows:

A. NO EXCEPTIONS TAKEN – Accepted subject to its compatibility with future submissions and additional partial submissions for portions of the work not covered in this submission.

B. MAKE CORRECTIONS NOTED – Same as NO EXCEPTIONS TAKEN except that minor corrections as noted shall be made by the Contractor.

C. REVISE AND RESUBMIT – Rejected because of major inconsistencies or errors which shall be resolved by the Contractor prior to subsequent review by the Engineer.

D. REJECTED – Submitted material does not conform to Contract Documents in major respect.

The Engineer's review is only for general conformance with the design concept of the project and general compliance with the information given in the Contract Documents. It shall not include review of quantities, dimensions, weights or gauges, fabrications processes, construction methods, coordination with other trades, or construction safety precautions, all of which are the responsibility of the Contractor.

The Engineer shall not be responsible for any deviations from the Contract Documents not brought to the attention of the Engineer in writing by the Contractor and acknowledged in writing by the Engineer.

Portions of the work requiring shop drawings, production data and samples shall not begin until the submission has been favorably reviewed by the Engineer. A copy of each favorably reviewed shop drawing, product data and sample shall be kept in good order by the Contractor at the site and shall be available to the Engineer.

12. Materials, Services and Facilities

It is understood that, except as otherwise specifically stated in the Contract Documents, the Contractor shall provide and pay for all materials, labor, tools, equipment, water, light, power, transportation, supervision, and all other services and facilities of any nature whatsoever necessary to execute, complete, and deliver the work within the specified time.

Materials and equipment shall be so stored as to insure the preservation of their quality and fitness for the work. Stored materials and equipment to be incorporated in the work shall be located so as to facilitate prompt inspection.

Manufactured articles, materials and equipment shall be applied, installed, connected, erected, used, cleaned and conditioned as directed by the manufacturer.

Materials, supplies and equipment shall be in accordance with samples submitted by the Contractor and reviewed by the Engineer.

Materials, supplies or equipment to be incorporated into the work shall not be purchased by the Contractor or any subcontractor subject to a chattel mortgage or under a conditional sale contract or other agreement by which an interest is retained by the seller.

13. Inspection and Testing

All materials and equipment used in the construction of the project shall be subject to adequate inspection and testing in accordance with generally accepted standards, as required and defined in the Contract Documents.

The Contractor shall provide, at his expense, the necessary testing and inspection services required by the Contract Documents, unless otherwise provided. (See Section 6 of the Special Provisions)

The Owner shall provide all other inspections and testing services not required by the Contract Documents. If the Contract Documents, laws, ordinances, rules, regulations or orders of any public authority having jurisdiction specifically require any work to be inspected, tested, approved by someone other than the Contractor, the Contractor will give the Engineer timely notice of readiness. The Contractor will then furnish the Engineer the required certificates of inspection, testing or approval.

Neither observations by the Engineer nor inspections, tests or approvals by persons other than the Contractor shall relieve the Contractor from his obligations to perform the Work in accordance with the requirements of the Contract Documents.

The Engineer and his representatives will at all times have access to the Work. In addition, authorized representatives and agents of the Owner and appropriate Federal or State agencies shall be permitted to inspect all work, material, payrolls, records of personnel, invoices of materials, and other relevant data and records. The Contractor will provide proper facilities for such access and observation of the Work and also for any inspection or testing thereof.

If any work is covered contrary to the written request of the Engineer, it must, if requested by the Engineer be uncovered of his observation and replaced at the Contractor’s expense.

If any work has been covered which the Engineer has not specifically requested to observe prior to it being covered, or if the Engineer considers it necessary or advisable that covered work be inspected or tested by others, the Contractor, at the Engineer’s request, will uncover expose or otherwise make available for observation, inspection or testing as the Engineer may require, that portion of the work in question, furnishing all necessary labor, materials, tools, and equipment. If it is found that such work is

not found to be defective, the Contractor will be allowed an increase in the contract price of an extension of the contract time, or both, directly attributable to such uncovering, exposure, observation, inspection, testing and reconstruction and an appropriate change order shall be issued.

14. Substitutions

Whenever a material, article or piece of equipment is identified on the Drawings or Specifications by reference to brand name or catalogue number, it shall be understood that this is referenced for the purpose of defining the performance of other salient requirements and that other products of equal capacities, quality and function shall be considered. The Contractor may recommend the substitution of a material, article or piece of equipment of equal substance and function for those referred to in the Contract Documents by reference to brand name or catalogue number, and if, in the opinion of the Engineer, such material, article, or piece of equipment is of equal substance and function to that specified, the Engineer may approve its substitution and use by the Contractor. The Contractor warrants that if substitutes are approved, no major changes in the function or general design of the project will result. Incidental changes or extra component parts required to accommodate the substitute will be made by the Contractor without a change in the contract price or contract time.

15. Patents

The Contractor shall pay all applicable royalties and license fees. He shall defend all suits or claims for infringement of any patent rights and save the Owner harmless from loss on account thereof, except that the Owner shall be responsible for any such loss when a particular process, design, or the product of a particular manufacturer or manufacturers is specified, but if the Contractor has reason to believe that the design, process or product specified is an infringement of a patent, he shall be responsible for such loss unless he promptly gives such information to the Engineer.

16. Surveys, Permits and Regulations

The Engineer will furnish lines and grades as required for the construction of the work. The Contractor shall make a general check of all lines, dimensions and elevations and shall make all necessary rechecks during the progress of the work to avoid errors in construction. The Contractor shall be responsible for proper dimensions and fittings of all items of work being performed by him. Should any discrepancy be found in lines, dimensions or elevations, they shall be reported to the Engineer immediately.

The Contractor shall protect all existing property and survey monuments, including survey control monuments for this work. The Contractor is responsible for protecting and preserving survey monuments and other survey markers. Any survey monuments damaged as a direct or indirect result of construction activities shall be re-established by a duly licensed land surveyor at the Contractor's sole expense. A corner record shall be filed in accordance with State law for any reset monuments at the Contractor's sole expense.

The Contractor shall carefully preserve benchmarks, reference points and stakes and, in case of willful or careless destruction, he shall be charged with the resulting expense and shall be responsible for any mistakes that may be caused by their unnecessary loss or disturbance.

Permits and licenses of a temporary nature necessary for the prosecution of the work shall be secured and paid for by the Contractor. Permits, licenses and easements for permanent structures or permanent changes in existing facilities shall be secured and paid for by the Owner, unless otherwise specified. The Contractor shall give all notices and comply with all laws, ordinances, rules and regulations bearing on the conduct of the Work as drawn and specified. If the Contractor observes that the Contract Documents are at variance therewith, he shall promptly notify the Engineer in writing, and any necessary changes shall be adjusted as provided in Paragraph 19 of these General Provisions, Changes in the Work.

17. Protection of Work, Property and Persons

The Contractor shall be responsible for initiating, maintaining and supervising all safety precautions and programs in connection with the work. He will take all necessary precautions for the safety of, and shall provide the necessary protection to prevent damage, injury or loss to all employees on the work and

other persons who may be affected thereby, all the work and all materials or equipment to be incorporated therein, whether in storage on or off the site, and other property at the site or adjacent thereto, including trees, shrubs, pavements, roadways, structures and utilities not designated for removal, relocation or replacement in the course of construction.

The Contractor shall comply with all applicable laws, ordinances, rules, regulations and orders of any public body having jurisdiction. He shall erect and maintain, as required by the conditions and progress of the work, all necessary safeguards for safety and protection. He shall notify owners of adjacent utilities when prosecution of the work may affect them. The Contractor shall remedy all damages, injury or loss to any property caused, directly or indirectly, in whole or in part, by the Contractor, any subcontractor or anyone directly or indirectly employed by any of them or anyone for whose acts any of them may be liable, except damage or loss attributable to the fault of the Contract Documents or to the acts or omissions of the Owner or the Engineer or anyone employed by either of them or anyone for whose acts either of them may be liable, and not attributable, directly or indirectly, in whole or in part, to the fault or negligence of the Contractor.

In emergencies affecting the safety of persons or the work or property at the site or adjacent thereto, the Contractor, without special instruction or authorization from the Engineer or Owner, shall act to prevent threatened damage, injury or loss. He will give the Engineer prompt written notice of any significant changes in the work or deviations from the Contract Documents caused thereby, and a change order shall thereupon be issued covering the changes and deviations involved.

18. Supervision by Contractor

The Contractor shall supervise and direct the work. He shall be solely responsible for the means, methods, techniques, sequences and procedures of construction. The Contractor shall employ and maintain on the work, a qualified supervisor or superintendent who shall have been designated in writing by the Contractor as the Contractor's representative at the site. The supervisor shall be present on the site at all times as required to perform adequate supervision and coordination of the work.

19. Changes in the Work

The Owner may at any time, as the need arises, order changes within the scope of the work without invalidating the Agreement. If such changes increase or decrease the amount due under the Contract Documents, or in the time required for performance of the work, an equitable adjustment shall be authorized by written change order.

The Engineer may also, at any time, by issuing a field order, make changes in the details of the work. The Contractor shall proceed with the performance of any changes in the work so ordered by the Engineer unless the Contractor believes that such field order entitles him to a change in contract price or contract time, or both, in which event he shall give the Engineer written notice thereof within seven (7) days after the receipt of the ordered change, and the Contractor shall not execute such changes pending the receipt of an executed change order or further instruction from the Owner.

20. Changes in Contract Price

The contract price may be changed only by a written change order. The value of any work covered by a change order or of any claim for increase or decrease in the contract price shall be determined by one or more of the following methods in the order of precedence listed below:

A. Unit prices previously approved.

B. An agreed lump sum.

C. If a lump sum or unit price cannot be mutually agreed upon, the Contractor shall be entitled to the sum of the following costs of doing the extra work:

1. Direct Labor Costs. Charges for cost of all the labor furnished and used by the Contractor shall be made for manual classifications up to and including general foreman. It will not include charges for assistant superintendents, superintendents, office personnel,

timekeepers, and maintenance and mechanics. The time charged to extra work shall be subject to the daily approval of the Engineer and evidence of such daily approval shall be submitted with the billing. Labor rates used to calculate the costs shall be those so designated in the Advertisement for Bids. No time or charges will be allowed, except when the men are actually engaged in the proper, efficient, and diligent performance or completion of the extra work as authorized. Overtime shall not be worked without prior approval by the Engineer.

2. Equipment Costs. Charges for the rental and operation of the equipment furnished and used by the Contractor shall be made for all prime construction and automotive equipment. It will not include charges for equipment or tools with a new cost of $1,000.00 or less. Equipment time charges must be subject to the daily approval submitted with the billing. The equipment rental and operation rates used shall be those agreed upon by the Engineer and the Contractor prior to commencement of the extra work. No time or charges will be allowed except when equipment is actually being used for the proper and efficient performance or completion of the extra work as authorized.

3. Material Costs. Charges for the cost of materials furnished by the Contractor shall be made providing such furnishing was specifically authorized in the extra work order and the actual use verified by the Engineer. Charges must be net cost to the Contractor delivered at the job, and vendor's invoice must accompany the billing along with verification of use of such materials by the Engineer.

4. Tools, Supplies, Overhead, Supervision and Profit. A charge for tools, supplies, overhead, supervision and profit will be allowed in the amount of 15% of the Total Direct Labor Costs, and Material Costs, as defined above.

Any extra work performed hereunder shall be subject to all of the provisions of the contract and the Contractor's sureties shall be bound with reference thereto as under the Contract.

21. Time for Completion and Liquidated Damages

The date of beginning and the time for completion of the work are essential conditions of the Contract Documents and the work embraced shall be commenced on a date specified in the Notice to Proceed.

Time is of the essence in this Agreement. The Contractor shall proceed with the work at such a rate of progress to ensure full completion within the contract time. It is expressly understood and agreed, by and between the Contractor and the Owner, that the contract time for the completion of the work described herein is a reasonable time.

The parties hereto agree that it is extremely difficult and impractical in this case to determine the actual damages the Owner will suffer if the Contractor fails to complete the work within the contract time and for said reason, if the Contractor shall fail to complete the work within the contract time, or extension of time granted by the Owner, then the Contractor will pay to the Owner the amount for liquidated damages as specified in the Agreement for each calendar day that the Contractor shall be in default after the time stipulated in the Contract Documents. The time for completion of the work shall be extended, and the Contractor shall not be charged with liquidated damages or any excess cost when the delay in completion of the work is due to the following, and the Contractor has promptly given written notice of such delay to the Engineer:

A. To any preference, priority or allocation order duly issued by the Owner.

B. To unforeseeable caused beyond the control and without the fault or negligence of the Contractor, including but not restricted to, acts of God or of the public enemy, acts of the Owner, acts of another contractor in the performance of a contract with the Owner, fires, floods, epidemics quarantine restrictions, strikes, freight embargoes, and climatic conditions which, in the opinion of the Engineer, make prosecution of the work unreasonably difficult.

C. To any delays of subcontractors occasioned by any of the causes specified in the above

paragraphs.

22. Correction of Work

The Contractor shall promptly remove from the premises all work rejected by the Engineer for failure to comply with the Contract Documents, whether incorporated in the construction or not, and the Contractor shall promptly replace and re-execute the work in accordance with the Contract Documents and without expense to the Owner and shall bear the expense of making good all work of other contractors destroyed or damaged by such removal or replacement.

23. Suspension of Work, Termination and Delay

The Owner may, at any time and without cause, suspend the work or any portion thereof for a period of not more than ninety days, or such further time as agreed upon by the Contractor, by written notice to the Contractor and the Engineer, which notice shall fix the date on which work shall be resumed. The Contractor will resume that work on the date so fixed. The Contractor will be allowed an increase in the contract price or an extension of the contract time, or both, directly attributable to any such suspension.

If the Contractor is adjudged as bankrupt or insolvent, or if he makes a general assignment for the benefit of his creditors, or if a trustee or receiver if appointed for the Contractor or for any of his property, or if he files a petition to take advantage of any debtor's act or to reorganize under the bankruptcy or applicable laws, or if he repeatedly fails to supply sufficient skilled workmen or suitable materials or equipment, or if he fails to make prompt payments to subcontractors or for labor, materials or equipment or if he disregards laws, ordinances, rules, regulations or orders of any public body having jurisdiction over the work or if he disregards the authority of the Engineer, or if he otherwise violates any provision of the Contract Documents, then the Owner may, without prejudice to any other right or remedy and after giving the Contractor and his surety a minimum of ten (10) days from delivery of a written notice, terminate the services of the Contractor, and finish the work by whatever method he may deem expedient. In such case the Contractor shall not be entitled to receive any further payment until the work is finished. If the unpaid balance, the Contractor shall pay the difference to the Owner. Such costs incurred by the Owner will be determined by the Engineer and incorporated in a change order.

Where the Contractor's services have been so terminated by the Owner, said termination shall not affect any right of the Owner against the Contractors then existing or which may thereafter accrue. Any retention or payment of monies by the Owner due the Contractor will not release the Contractor from compliance with the Contract Documents.

After ten (10) days from delivery of a written notice to the Contractor and the Engineer, the Owner may without cause and without prejudice to any other right or remedy, elect to abandon the project and terminate the contract. In such case, the Contractor shall be paid for all work executed and any expense sustained plus reasonable profit.

If, through on act or fault of the Contractor, the work is suspended for a period of more than ninety (90) days by the Owner or under an order of court or other public authority, or the Engineer fails to act on any request for payment within thirty (30) days after it is submitted, or the Owner fails to pay the Contractor substantially the sum approved by the Engineer or awarded by arbitrators within thirty (30) days of its approval and presentation, then the Contractor may, after the (10) days from delivery of a written notice to the Owner and the Engineer stop the work until he has been paid all amounts then due, in which event and upon resumption of the work, change orders shall be issued for adjusting the contract price or extending the contract time or both to compensate for the costs and delays attributable to the stoppage of the work.

24. Progress Estimates

On or about the last day of the calendar month, the Contractor will, except as hereinafter provided, make in writing and certify to the Owner an estimate which, in his opinion, is just and fair of the amount and value of the work completed by the Contractor up to that time in the performance of the contract. In case of work for which unit prices are named in the contract, the estimate shall be computed on the basis of said unit prices. In the case of work for which a lump sum is named in the contract, the Engineer may

use a breakdown of the lump sum price submitted by the Contractor, provided that such breakdown is submitted within 10 calendar days after the execution of the Agreement in a form acceptable to the Engineer. No payment will be made to the Contractor until such schedule has been submitted to and reviewed by the Engineer. To the figure thus arrived at shall be added any amounts due the Contractor for extra work and the amount of any approved claims for extra costs to the date of the progress estimate the retained percentage hereinafter provided for shall be deducted from the total thus computed; and from the remainder, there shall be further deducted any amounts due the Owner from the Contractor for supplies or materials furnished or services rendered and any other amounts that may be due the Owner under the terms of the contract. In preparing estimates for partial payment, consideration shall be given to delivery on the site of pipe, and fittings which will become a part of the finished construction work and for which payment in full has been made by the Contractor, but no consideration will be given to preparatory work done or other materials on hand. From the balance thus determined shall be deducted the amount of all previous payments and the remainder shall constitute the partial estimate for that month. Such partial estimates shall not be required to be made by strict measurement, but may be made by measurement or by estimation or partly by one method and partly by the other and it shall be sufficient if they are approximate only. Partial estimates may be withheld or reduced if, in the opinion of the Engineer, the Contractor is not diligently and efficiently endeavoring to comply with the intent of the Agreement.

25. Progress Payments

The Owner will make payments on account of the contract as follows: Not later than the 30th day of the month following the month in which the contract is awarded, and the 30th day of each calendar month thereafter, the Owner will pay to the Contractor 95% of the amount earned by the Contractor during the preceding month at the rate of prices set forth in the contract, based on the estimate of the Engineer.

The retention will be held by the Owner until 35 days following filing of the Notice of Completion.

26. Prompt Payment

The Contractor shall promptly pay all subcontractors and suppliers within ten (10) days of receipt of any progress payment, final payment or retention paid by the Owner to the Contractor. Contractor shall advise all subcontractors and suppliers that all second-tier subcontractors and suppliers must be paid within then (10) days of their receipt of payment from the Contractor.

27. Acceptance and Final Payment

Upon receipt of written notice from the Contractor that the work is ready for final inspection and acceptance, the Engineer will promptly make such inspection, and when he finds the work acceptable under the contract, and the contract fully performed, he will promptly issue a final certificate, over his own signature, stating that the work required by this contract has been completed. The Owner then shall issue a formal Notice of Completion, and the entire balance found to be due shall be paid to the Contractor by the Owner 35 days from the date of recording by the Owner of the Notice of Completion of all work covered by this contract.

Before issuance of the Notice of Completion, the Contractor shall submit evidence satisfactory to the Owner that all payrolls, material bills, and other indebtedness connected with the work have been paid, or if not paid, then the Contractor shall submit evidence of the status of any unpaid indebtedness.

The making and acceptance of the final payment shall constitute a waiver of all claims by the Owner except the following:

A. those arising from unsettled liens;

B. those arising from faulty work appearing within 12 months after the date of filing of the Notice of Completion;

C. those arising from failure to meet the requirements of the Contract Documents or the specifications; or,

D. those arising from manufacturers' guarantees.

The acceptance by Contractor of the final payment referred to in this paragraph 27 herein, shall be a release of Owner from all claims of liability to Contractor for anything done or furnished for, or relating to, the work or for any act or neglect of Owner or of any person relating to or affecting the work, except demands against Owner for the remainder, if any, of the amounts kept or retained under the provisions of Paragraph 25, Progress Payments, herein; and excepting pending, unresolved claims.

28. Quantities and Unit Prices

The quantities noted in the schedule are approximation for comparing bids, and no claim shall be made against the Owner for excess or deficiency therein. Payment at the unit prices set forth in the schedule will constitute payment in full for the completed work and will include materials, supplies, labor, tools, machinery, and all other expenditures incident to satisfactory compliance with the contract, unless otherwise specifically provided.

The quantities of work performed will be computed for payment by the Engineer on the basis of measurements taken by the Engineer, and these measurements shall be final and binding.

29. Insurance

The Contractor shall not commence work under this Agreement until he has obtained all the insurance required under this section and such insurance has been approved by the Owner, nor shall the Contractor allow any subcontractor to commence work on his subcontract until the insurance required of the subcontractor has been so obtained and approved. All insurance required under this section shall be maintained at the expense of the Contractor continuously during the life of the contract up to the date of acceptance of the work by the Owner.

Commercial General Liability and Automobile Liability Insurance – The Contractor shall provide and maintain the following commercial general liability and automobile liability insurance:

A. Coverage – Coverage for commercial general liability and automobile liability insurance shall be at least as broad as the following:

1. Insurance Services Office Commercial General Liability coverage (Occurrence Form CG 0001)

2. Insurance Service Office Form Number CA 0001 (ed. 1/87) covering Automobile Liability, Code 1 (any auto)

B. Limits – The Contractor shall maintain limits no less than the following:

1. General Liability – Two million dollars ($2,000,000) per occurrence for bodily injury, personal injury and property damage. If Commercial General Liability Insurance or other form with a general aggregate limit is used, either the general aggregate limit shall apply separately to the project/location (with the ISO CG 2501 or insurer's equivalent endorsement provided to the Owner) or the general aggregate limit shall be twice the required occurrence limit.

2. Automobile Liability – One million dollars ($1,000,000) per accident for bodily injury and property damage combine single limit.

C. Required provisions – The general liability and automobile liability policies are to contain, to be endorsed to contain the following provisions:

1. The Owner and its directors, officers, employees, agents and volunteers are to be covered as insured as respects: liability arising out of activities performed by or on behalf of the Contractor, products and completed operations of the Contractor, premises owned, occupied or used by the Contractor, or automobiles owned, leased, hired or borrowed by the Contractor. The coverage shall contain no special

limitations on the scope of protection afforded to the Owner and its directors, officers, employees, agents, and volunteers.

2. For any claims related to this work, the Contractor's insurance shall be the primary insurance as respects the Owner and its directors, officers, employees, agents and volunteers. Any insurance, pooled coverage or self-insurance maintained by the Owner and its directors, officers, employees, agents and volunteers shall not contribute to it.

3. Any failure to comply with reporting or other provisions of the policies including breaches of warranties shall not affect coverage provided to the Owner and their directors, officers, employees, agents and volunteers.

4. The Contractor's insurance shall apply separately to each insured against whom claim is made or suit is brought, except with respect to the limits of the insurer's liability.

5. Each insurance policy required by this clause shall be endorsed to state that coverage shall not be suspended, voided, canceled by either party, reduced in coverage or in limits except after thirty (30) days prior written notice by certified mail, return receipt requested, has been given to the Owner.

D. Deductibles and Self-Insured Retentions – Any deductible or self-insured retention must be declared to and approved by the Owner. At the option of the Owner, either the insurer shall reduce or eliminate such deductibles or self-insured retentions.

E. Acceptability of Insurers – Insurance is to be placed with insurers having a current A.M. Best's rating of no less than A-: VII or equivalent.

Workers' Compensation and Employer's Liability Insurance – The Contractor and all subcontractors shall cover or insure under the applicable laws relating to workers' compensation insurance, all of their employees working on or about the construction site, regardless of whether such coverage or insurance is mandatory or merely elective under law, and the Contractor shall defend, protect and save harmless the Owner and its directors, officers, employees, agents and volunteers from and against all claims, suits, and actions arising from any failure of the Contractor or any subcontractor to maintain such insurance. Before beginning work, Contractor shall furnish to the Owner satisfactory proof that Contractor has taken out for the period covered by the work under this Contract, full compensation insurance for all persons employed directly by Contractor or through subcontractors in carrying out the work contemplated under this Contract, all in accordance with the "Workers' Compensation and Insurance Act," Division IV of the Labor Code of the State of California and any Acts amendatory thereof.

The Contractor shall provide employer's liability insurance in the amount of, at least, $1,000,000 per accident for bodily injury and disease.

The Contractor shall provide the Owner with a certificate of Workers' Compensation and Employers liability insurance coverage.

In signing the Agreement, Contractor makes the following certification required by Section 1861 of the Labor Code:

"I am aware of the provisions of Section 3700 of the Labor Code which requires each employer to be insured against liability for workmen's compensation or to undertake self insurance in accordance with the provisions of that code, and I will comply with such provisions before commencing the performance of the work of this contract."

Evidences and Cancellation of Insurance – Prior to execution of the Agreement, the Contractor shall file with the Owner evidence of insurance from an insurer or insurers certifying to the coverage of all insurance required herein. Such evidence shall include original copies of the ISO CG 2010 (or insurer's

equivalent) signed by the insurer's representative and certificate of insurance (Accord Form 25-S or equivalent). All evidence of shall be certified by a properly authorized officer, agent or qualified representative of the insurer and shall certify the names of the insured, any additional primary insurers, where appropriate, the type and amount of the insurance, the location and operations to which the insurance applies, the expiration date, and that the insurer will give by certified mail, written notice to the Owner at least thirty (30) days prior to the effective date of any cancellation, lapse or material change in the policy.

The Contractor shall, upon demand of the Owner, deliver to the Owner all such policy or policies of insurance and the receipts for payment of premiums thereon; and should the Contractor neglect to obtain and maintain in force any such insurance or deliver such policy or policies and receipts to the Owner, then it shall be lawful for the Owner to obtain and maintain such insurance, and the Contractor hereby appoints the Owner the true and lawful attorney-in-fact to do all things necessary for this purpose. All money paid by the Owner for insurance premiums under the provisions of this article shall be charged to the Contractor.

30. Contract Security

The Contractor shall, within ten (10) days after the receipt of the Notice of Award, furnish the Owner with a performance bond and a payment bond in penal sums equal to 100% of the contract price, conditioned upon the performance by the Contractor of all undertakings, covenants, terms, conditions and agreements of the Contract Documents, and upon the prompt payment by the Contractor to all persons supplying labor and materials in the prosecution of the work provided by the Contract Documents. Such bonds shall be executed by the Contractor and corporate bonding company licensed to transact such business in the state in which the Work is to be performed and named on the current list of "Surety Companies Acceptable Federal Bonds" as published in the Treasury Department Circular Number 570. The expense of these bonds shall be borne by the Contractor. If at any time a surety on any such bond is declared a bankrupt or loses its right to do business in the state in which the work is to be performed or is removed from the list of surety companies accepted on Federal bonds, Contractor shall within ten (10) days after notice from the Owner to do so, substitute an acceptable bond (or bonds) in such form and sum and signed by such other surety or sureties as may be satisfactory to the Owner. The premiums on such bond (s) shall be paid by Contractor. No further payments shall be deemed due nor shall be made until the new surety or sureties shall have furnished an acceptable bond to the Owner.

Attached to the bonds shall be the original, or a certified copy, of the unrevoked appointment, power of attorney, bylaws or other instrument which entitles and authorizes the person to execute the bond to do so, a certified copy of the certificate of authority or the insurer issued by the Insurance Commissioner of the county in which the Owner is located which would state that the certificate of authority of the insurer (the bonding company) has not been surrendered, revoked, cancelled, annulled, or suspended.

The performance bond shall remain in full force and effect during the warranty period of 12 months from the date of acceptance of the work by the Owner.

If requested by the Owner or Engineer, copies of the insurer's most recent annual statement and quarterly statement filed with the Department of Insurance pursuant to Article 10 (commencing with Section 900) of Chapter 1 of Part 2 of Division 1 of the Insurance Code, shall be provided to the Owner or Engineer within 10 calendar days of the insurer's receipt of the request to submit the statements.

31. Assignments

Neither the Contractor nor the Owner shall sell, transfer, assign or otherwise dispose of the contract or any portion thereof, or of his right, title or interest therein, or his obligation thereunder, without written consent of the other party.

32. Indemnification

Contractor shall indemnify and hold harmless and defend the Owner and the Engineer and their directors, officers, employees, agents or volunteers, and each of them from and against:

A. Any and all claims, demands, causes of action, damages, costs, expenses, losses or liabilities, in law or in equity, of every kind and nature whatsoever for, but not limited to, injury to or death of any person including Owner and/or Engineer and/or Contractor, or any directors, officers, employees, agents volunteers of the Owner, Engineer or Contractor, and damages to or destruction of property of any person, including but not limited to, Owner, Engineer and/or Contractor and their directors, officers, employees, agents or volunteers arising out of or in any manner directly or indirectly connected with the work to be performed under this Agreement, however caused regardless of any negligence of the Owner or the Engineer or their directors, officers, employees, agents, or volunteers, except the sole negligence of willful misconduct or active negligence of the Owner or the Engineer or their directors, officers, employees, agents or volunteers:

B. Any and all actions, proceedings, damages, costs, expenses, penalties or liabilities in law or equity, of every kind or nature whatsoever, arising out of , resulting from or on account of the violation of any governmental law or regulation, compliance with which is the responsibility of Contractor.

Contractor shall defend, at Contractor's own cost, expense and risk, any and all such aforesaid suits, actions or other legal proceedings of every kind that may be brought or instituted against the Owner and the Engineer or their directors, officers, employees, agents or volunteers.

Contractor shall pay and satisfy any judgment, award or decree that may be rendered against the Owner and their directors, officers, employees, agents, or volunteers in any such suit, action or other legal proceedings.

Contractor shall reimburse the Owner and their directors, officers, employees, agents and/or volunteers, for any and all legal expenses and costs incurred by them in connection therewith or in enforcing the indemnity herein provided.

Contractor agrees to carry insurance for this purpose as set out in the specifications. See Paragraph 29 of these General Provisions for insurance specifications and coverage. Contractor's obligation to indemnify shall not be restricted to insurance proceeds, if any, received by the Owner and the Engineer or their directors, officers, employees, agents and/or volunteers.

33. Separate Contracts

The Owner reserves the right to let other contracts in connection with this project. The Contractor shall afford other contractors reasonable opportunity for the introduction and storage of their materials and the execution of their work, and shall properly connect and coordinate his work with theirs. If the proper execution or results of any part of the Contractor's work depend upon the work of any other contractor, the Contractor shall inspect and promptly report to the Engineer any defects in such work that render it unsuitable for such proper execution and results.

The Owner may perform additional work related to the project by himself, or he may let other contracts containing provisions similar to these. The Contractor will afford the Contractors who are parties to such contracts (or the Owner, if he is performing the additional work himself), reasonable opportunity for the introduction and storage of materials and equipment and the execution of work, and shall properly connect and coordinate his work with theirs.

In the performance of additional work by other contractors or the Owner is not noted in the Contract Documents prior to the execution of the Agreement, written notice thereof shall be given to the Contractor prior to starting any such additional work. If the Contractor believes that the performance of such requires additional expense or entitles him to an extension of the contract time, he may make a claim therefore as provided in Items 19 and 20 of these General Provisions.

34. Subcontracting

The Contractor may utilize the services of specialty subcontractors on those parts of the work which, under normal contracting practices, are performed by specialty subcontractors.

The Contractor shall be fully responsible to the Owner for the acts and omissions of his subcontractors, and of persons either directly or indirectly employed by them, as he is of the acts and omissions of persons directly employed by him.

The Contractor shall cause appropriate provisions to be inserted in all contracts relative to the work to bind subcontractors to the Contractor by the terms of the Contract Documents in so far as applicable to the work of subcontractors and to give the Contractor the same power as regards terminating any subcontract that the Owner may exercise over the Contractor under any provision of the Contract Documents.

Nothing contained in this contract shall create any contractual relation between any subcontractor and the Owner.

Contractor shall include all subcontractors as insured under its policies or shall furnish separate certificates and endorsements for each subcontractor. All coverage for subcontractors shall be subject to all of the requirements stated herein.

35. Employment of Apprentices

The Contractor and any subcontractor under him shall comply with the requirements of Sections 1777.5 and 1777.6 of the Labor Code in the employment of apprentices. The responsibility for compliance with the provisions of said Section 1777.5 for all apprenticeship occupations shall rest with the Contractor. Information relative to apprenticeship standards, wage schedules and other requirements may be obtained from the Division of Apprenticeship Standards, 455 Golden Gate Avenue, San Francisco, California, or from its branch offices.

36. Payment of Prevailing Wages

The Contractor and all subcontractors under him shall pay all laborers, workmen and mechanics on all work included in this contract no less than the general prevailing rate of per diem wages for work performed, (to-wit, within the limits of the City), and no less than the general prevailing rate of per diem wages for legal holiday and overtime work in said locality, which per diem wages shall not be less than the stipulated rate contained in a schedule thereof which has been ascertained and determined by the Council to be the general prevailing rate of per diem wages for each craft or type of workman or mechanic needed to execute this contract, and which is now on file with the City Clerk, as set forth in the Information for Bidders, and by reference it is incorporated herein and made a part hereof.

The Contractor shall forfeit, as a penalty to the Owner, two hundred dollars ($200.00) for each laborer, workman or mechanic employed for each calendar day or portion thereof such laborer, workman or mechanic is paid less than the said stipulated rates for any work done under this contract by him or by any subcontractor under him in violation of Articles 1 and 2 of Chapter 1 Part 7 of Division 11 of the Labor Code of the State of California, and said sums and amounts which shall have been so forfeited pursuant to the herein paragraph and the said terms of said Labor Code shall be withheld and retained from payments due to the Contractor under said contract, pursuant to this contract and the said terms of said Labor Code; but no sum shall be so withheld, retained or forfeited except from the final payment without a full investigation by either the Division of Labor law Enforcement of the State Department of Industrial Relations or by said Council.

The difference between such stipulated prevailing wage rates and the amount paid to each workman for each calendar day, or a portion thereof, for which each workman was paid less than the stipulated prevailing wage rate shall be paid to each workman by the Contractor. The Contractor shall comply with the provisions of Section 1775 of the Labor Code of the State of California.

The Contractor and his subcontractors shall submit certified payroll information electronically to the Department of Industrial Relations as well as a hard copy of said certified payrolls to the Owner on a monthly basis.

37. Registration to Train Apprentices

Pursuant to Labor Code Section 1777.5, all contractors shall file with the appropriate Joint Apprenticeship Training Committee, a DAS-140 form registering to train apprentices. This requirement to register to train apprentices is mandated by Section 1777.5 whether or not you are signatory to or a party of any approved training program. Only those programs approved by the California Apprenticeship Council are applicable to accept DAS-140 registration forms.

If the contractor is approved to train apprentices, then apprentices must be called in a ratio not less than one apprentice hour for each five journeyman hours.

However, if the entire contract may be completed within 20 working days or the entire contract (nor subcontracts) is less than thirty thousand ($30,000), then the Contractor is exempt from requesting apprentices under Labor Code Section 1777.5.

In addition, all contractors are required to make appropriate training contributions as set forth in the prevailing wage determination to each appropriate JATC, or in the alternative, to the California Apprenticeship Council. Payments shall be made not less than monthly, calculated and paid by the fifteenth of each month, for work performed that prior month.

The address for the applicable Joint Apprenticeship Training Committee and for the California Apprenticeship Council can be obtained by calling the Division of Apprenticeship Standards.

38. Penalties

Failure to pay the appropriate prevailing wage can result in penalties being assessed as follows:

A. Up to $50.00 per day per worker for each and every violation; and,

B. debarment from future public works for a period not to exceed three years.

C. $50.00 per day per worker for each failure to comply with the payment of overtime for all hours worked in excess of 8 in one day or 40 in one week.

Failure to register to train apprentices or failure to pay the appropriate training contribution can result in penalties being assessed as follows:

A. $100.00 per day for each day of violation; and,

B. debarment from future public works for a period not to exceed three years.

39. Engineer's Authority

The Engineer shall act as the Owner's representative. He shall decide questions which may arise as to quality and acceptability of materials furnished and work performed. He shall interpret the intent of the Contract Documents in a fair and unbiased manner. The Engineer will make visits to the site and determine if the work is proceeding in accordance with the Contract Documents.

The Contractor will be held strictly to the intent of the Contract Documents in regard to the quality of materials, workmanship and execution of the work. Inspections may be made at the factory or fabrication plant of the source of material supply.

The Engineer will not be responsible for the construction means, controls, techniques, sequences, procedures, or construction safety.

40. Land and Rights-of-Way

Prior to issuance of the Notice to Proceed, the Owner shall obtain all land and rights-of-way necessary for carrying out and for the completion of the work to be performed pursuant to the Contract Documents, unless otherwise mutually agreed.

The Owner shall provide to the Contractor information which delineates and describes the lands owned and rights-of-way acquired.

The Contractor shall provide, at his own expense and without liability to the Owner, any additional land

and access thereto that the Contractor may desire for temporary construction facilities, or for storage of materials.

41. Warranty and Guarantee

Contractor warrants and guarantees to Owner that all work will be in accordance with the Contract Documents and will not be defective. Prompt notice of defects known to Owner shall be given to Contractor. All defective work, whether or not in place, may be rejected, corrected or accepted as provided in Paragraph 19, Changes in the Work, of these General Provisions. Defective work may be rejected even if approved by prior inspection.

42. One (1) Year Warranty Period

The warranty period shall commence when the Notice of Completion is issued, at notice of beneficial occupancy or at notice of partial utilization of the work to be warranted has been issued, or a later date if so specified in the Agreement, or mutually agreed to, and extend until one (1) year after that date or whatever longer period may be prescribed by laws or regulations or by the terms of any applicable special guarantee or specific provision of the Contract Documents.

43. Correction of Defective Work

If within the designated warranty period, or such longer period as may be required by Laws or Regulations, the work, or any part of the work, is discovered to be defective, Contractor shall promptly, without an adjustment in contract price and in accordance with Owner's written instructions, either correct that defective work, or if it has been rejected by Owner, remove it from the site and replace it with non-defective work. If circumstances warrant it, including but not limited to, in an emergency, Owner may have the defective work corrected or the rejected work removed and replaced. In that event, Contractor shall not be allowed to recover any associated costs, and he shall reimburse Owner for all direct, indirect and consequential costs of Owner, and Owner shall be entitled to an appropriate decrease in contract price, to withhold a set-off against amount recommended for payment, or make a claim on Contractor's bond if Contractor has been paid in full. Where defective work (and damage to other work resulting therefrom) has been corrected, removed or replaced during the warranty period, the one (1) year warranty period with respect to such work will be extended for an additional period of one (1) year after such correction or removal and replacement has been satisfactorily completed.

44. Early Completion

The one (1) year warranty period will not begin until the Notice of Completion is filed. If Contractor completes the work or portions thereof prior to this time, he shall preserve the equipment and/or facilities by developing and implementing a preventive maintenance program in compliance with manufacturer's recommendations to maintain the equipment and/or facilities unless Owner has issued a notice of beneficial occupancy or notice of partial utilization for the warranted work. At start up, Contractor will be required to get his equipment and/or facilities ready to put into service.

45. Extended Warranties and Guarantees

Owner may at its sole discretion extend the one (1) year warranty period up to twenty-four (24) months, in which case Contractor shall maintain the warranties and guarantees. If such extension of the one (1) year warranty period causes an increase in the cost of the warranties and guarantees provided by Contractor, an adjustment in contract price shall be made as provided by the Contract Documents.

46. Arbitration

With the prior approval of the Owner and the Contractor, all claims, disputes and other matters in question arising out of, or relation to, the Contract Documents or the breach thereof, except for claims which have been waived by the making and acceptance of final payment as provided by Item 27 of these General Provisions, may be decided by arbitration in accordance with the Arbitration Rules of the American Arbitration Association. If entered into, the agreement to arbitrate shall be specifically

enforceable under the prevailing arbitration law. The award rendered by the arbitrators shall be final, and judgment may be entered upon it in any court having jurisdiction thereof.

Notice of the request for arbitration shall be filed in writing with the other party to the Contract Documents and with the American Arbitration Association, and a copy shall be filed with the Engineer. The request for arbitration shall set forth specifically the dispute to be arbitrated. Acceptance by the other party of the request to arbitrate shall constitute the agreement to arbitrate and arbitration shall proceed forthwith. No legal proceedings other than to enforce arbitration shall be commenced on any issue covered by the arbitration agreement.

The Contractor shall carry on the work and maintain the progress schedule during any arbitration proceedings, unless otherwise mutually agreed in writing.

47. Taxes

The Contractor shall pay all sales, consumer, use and other similar taxes required by the law of the place where the work is performed.

48. Contractor's Understanding

It is understood and agreed that the Contractor has, by careful examination, satisfied himself as to the nature and extent of the work, the character, quality, and quantity of the materials to be encountered, the character of the equipment and facilities needed preliminary to and during the prosecution of the work, the general and local conditions, and all other matters which can in any way affect the work under this contract. No verbal agreement or conversation with any officer, agent or employee of the Engineer or the Owner, either before or after the execution of this Agreement, shall affect or modify any of the terms or obligations herein contained.

49. Accidents

The Contractor shall provide, at the site, such equipment and medical facilities as are necessary to supply first-aid service to anyone who may be injured in connection with the work. The Contractor must promptly report in writing to the Engineer all accidents whatsoever arising out of, or in connection with the performance of the work, whether on or adjacent to the site which causes death, personal injury, or property damages, giving full details and statements of witnesses. In addition, if death or serious injuries or serious damages are caused, the accident shall be reported immediately by telephone or messenger to both the Engineer and the Owner. If any claim is made by anyone against the Contractor or any subcontractor on account of any accident, the Contractor shall promptly report the facts in writing to the Engineer, giving full details of the claim.

50. Safety and Sanitation

The Contractor shall provide adequate safety and sanitation facilities according to State laws and local ordinances.

The Contractor will assume sole and complete responsibility for job site conditions during the course of construction of the project, including safety of all persons and equipment. This responsibility shall apply continuously and not be limited to normal working hours.

51. Climatic Conditions

The Engineer may order the Contractor to suspend any work that may be subject to damage by climatic conditions. The Contractor may suspend work if climatic conditions are such that the Contractor is unable to work. In such case, the Contractor, within seven days, shall request in writing a change order to extend the contract time.

52. Officials Not To Benefit

No official of the Owner shall receive any benefit that may arise by reason of this contract.

53. Clean-Up

During the progress of the work, the Contractor shall maintain the site and related structures and equipment in a clean, orderly condition and free from unsightly accumulations of rubbish. Upon completion of the work, the Contractor shall remove from the vicinity of the work all plants, buildings, rubbish, unused materials, concrete forms, temporary bridging, and other like material, belonging to him or used under his direction during construction, and in the event of his failure to do so, the same may be removed by the Owner after 10 calendar days notice to the Contractor at the expense of the Contractor, and his surety or sureties shall be liable therefore.

As part of the final clean-up, the Contractor shall dress up and grade the right-of-way to match existing ground surfaces, and shall remove therefrom all weeds and other growth. Where the construction has crossed yards or driveways, they shall be restored to a condition equivalent to the condition existing prior to the construction as determined by the Engineer.

No direct payment will be made to the Contractor for any clean-up work, but all compensation therefore shall be included in the prices bid in the schedule for the various items of work.

54. Notice to Owner

In the event this contract involves digging trenches or excavations that extend deeper that four feet below the surface, the Contractor shall promptly, and before the following conditions are disturbed, notify Owner, in writing, of any:

A. Material that the Contractor believes may be material that is hazardous waste, as defined in Section 25117 of the Health Safety Code, that is required to be removed to a Class I, Class II, or Class III disposal site in accordance with provisions of existing law;

B. Subsurface or latent physical conditions at the site differing from those indicated;

C. Unknown physical conditions at the site of any unusual nature, different materially from those ordinarily encountered and generally recognized as inherent in work of the character provided for in the contract.

Owner shall promptly investigate the conditions. If Owner finds that the conditions do materially so differ, or do involve hazardous waste, and cause a decrease or increase in the Contractor's cost of, or the time required for, performance of any part of the work, Owner shall issue a change order under the procedures described in the contract.

In the event a dispute arises between Owner and Contractor whether the conditions materially differ, or involve hazardous waste, or cause a decrease or increase in the Contractor's cost of, or time required for, performance of any part of the work, the Contractor, shall not be excused from any scheduled completion date provided for by the contract, but shall proceed with all work to be performed under the contract. The Contractor shall retain any and all rights provided either by contract or by law which pertain to the resolution of disputes and protests between Contractor and Owner.

55. Payment of Withheld Funds

The Owner shall retain 5**%** of each payment from Contractor and shall make prompt and regular incremental acceptances of portions, as determined by the Owner, of the agreed upon work, and pay retention to the Contractor based on these acceptances. The Contractor, or subcontractor, shall return all monies withheld in retention from a subcontractor within 30 days after receiving payment for work satisfactorily completed and accepted including incremental acceptances of portions of the contract agreement work by the Owner. Federal law (49CFR26.29) requires that any delay or postponement of payment over 30 days may take place only for good cause and with the Owner's prior written approval. Any violation of this provision shall subject the violating Contractor or subcontractor to the penalties, sanctions and other remedies specified in Section 7108.5 of the Business and Professions Code. These requirements shall not be construed to limit or impair any contractual, administrative, or judicial remedies otherwise available to the Contractor or subcontractor in the event of a dispute involving late payment or nonpayment by the Contractor, deficient subcontract performance, or noncompliance. When the work is

complete, the Owner will issue a Notice of Completion to the County. The Owner will pay all retention funds to the Contractor thirty-five (35) Days after Notice of Completion has been recorded.

56. Storm Water Pollution Prevention Measures

Storm Water Pollution Prevention Measures shall be performed in accordance with the provisions in Section 13-3, "Storm Water Pollution Prevention Plan," of the Standard Specifications.

A. GENERAL

In compliance with the State and Federal regulations regarding storm water management during construction, the Contractor shall not allow any debris, waste materials or pollutants, originating from the Contractor's operations, to enter the storm drainage system, which leads to contamination of local creeks and ponding basins.

The Contractor shall properly dispose of all wastes and excess materials in a legal manner to the satisfaction of the Owner.

B. SELECTIVE BMPS FOR STORM WATER POLLUTION PREVENTION

As applicable to the project or directed by the Engineer, the Contractor shall implement any or all of the following Best Management Practices (BMPs):

1. Material Handling and Storage

a. Nonhazardous Materials

i. Designated Delivery and Storage Area

The Contractor shall propose areas in the vicinity of or within the project site or within the Contractor's staging site, which are suitable for material delivery and storage. To the maximum extent practicable, these areas shall be away from gutters, catch basins, drainage courses or creeks. The Contractor shall submit the proposed areas to and shall obtain the approval from the Engineer in writing prior to bringing in materials.

ii. Storage of Granular Materials

The Contractor shall store granular materials at least ten feet (10') away from any inlet or curb return and shall prevent the granular materials from entering the storm drain system, drainage courses or creeks. During wet weather or when rain is forecast within 24 hours, the Contractor shall cover granular materials with a tarpaulin and surround the material with sandbags or other approved heavy objects.

b. Hazardous Materials

i. Hazardous materials include, but are not limited to, petroleum products, antifreeze, paints, thinners, solvents, pesticides, herbicides and various other toxic chemicals.

ii. The Contractor shall propose, within the project site or the Contractor's staging site, an area that is suitable for hazardous material delivery and storage. To the maximum extent practicable, the area shall be away from inlets, gutters, drainage courses or creeks. The Contractor shall submit the proposed area to and shall obtain approval from the Engineer in writing prior to bringing in hazardous materials.

iii. The Contractor shall label and store all hazardous materials and hazardous wastes in accordance with secondary containment regulations, the City of Los Banos Hazardous Materials Storage Ordinance and all applicable Merced County, State and Federal laws and

regulations.

iv. The Contractor shall keep all hazardous materials or waste in containers and fully covered to avoid contamination of storm runoff.

v. The Contractor shall keep an accurate, up-to-date inventory, including Materials Safety Data Sheets (MSDSs), of hazardous materials and hazardous wastes stored on-site to assist emergency response personnel in the event of a hazardous material incident.

2. Hazardous Material Usage

a. The Contractor shall follow all local, State and Federal policies, laws and regulations governing the use of hazardous materials.

b. The Contractor shall use only Category III pesticides for pest control. If Category III pesticides are unavailable, have been tried but proven ineffective, or when it is necessary to prevent a pest outbreak that poses an immediate threat to public health or significant economic loss, the City may consider allowing the use of Category II pesticides with a dose of up to LD50 (a dose that kills 50 percent of the targeted pest population in the laboratory) provided that the risk to the applicator and impact to the environment can be justified. Use of Category I pesticides is prohibited.

c. Apply pesticides at the appropriate time to maximize their effectiveness and minimize the likelihood of discharging non-degraded pesticides into storm water system, drainage courses and creeks.

d. Mix only as much material as is necessary for treatment. Calibrate application equipment prior to and during use to ensure desired application rate. Do not mix or load pesticides adjacent to storm drain system, drainage courses or creeks.

e. The Contractor shall not overapply herbicides, pesticides or fertilizers and shall follow the manufacturer's instructions regarding uses, protective equipment, ventilation, flammability and mixing of chemicals. Over-application of a pesticide is a "label violation" subject to an enforcement action by the Merced County Agriculture Department.

f. When rain is forecast within 24 hours or during wet weather, the Contractor shall not apply chemicals in outside areas unless otherwise allowed by the Engineer in writing.

3. Integrated Pest Management Methods

The Contractor shall employ, in place of pesticides, integrated pest management methods including:

a. No control

b. Physical or mechanical methods

c. Least toxic chemicals (insecticidal soaps and oil, etc.)

4. Vehicle and Equipment Cleaning, Maintenance and Fueling

a. Cleaning

The Contractor shall not clean or wash vehicles or equipment on- site or in the streets. If allowed by the Engineer in writing, cleaning and washing shall be performed in a designated and bermed area approved by the Engineer using water only. No soaps, solvents, degreasers, steam cleaning equipment or similar methods are permitted. The Contractor shall not allow wash water to flow into streets, gutters, storm drain system, drainage courses or creeks.

b. Maintenance and Fueling

i. The Contractor shall perform maintenance and fueling of vehicles or equipment in a designated, bermed area or over a drip pan that will prevent waste, leaks or spills from entering streets, gutters, storm drain system, drainage courses or creeks.

ii. The Contractor shall inspect all vehicles and equipment arriving on-site for leaking fluids and shall promptly repair leaking vehicles and equipment. Drip pans shall be used to catch leaks until repairs can be made. Shut-off valves on equipment must be working properly.

5. Spill Prevention and Control

a. If hazardous materials are used on the project, the Contractor shall keep a stockpile of spill clean-up materials, such as rags or absorbents, readily accessible on-site.

b. Above-ground storage tanks and their installations shall comply with City, State and Federal requirements.

c. The Contractor shall immediately contain and prevent spills or leaks from entering storm drain system, drainage courses or creeks and shall properly clean up and dispose of the spills or leaks. The Contractor shall not wash the spills or leaks into streets, gutters, storm drain system, drainage courses or creeks and shall not bury the spills or leaks.

d. In case of a hazardous material spillage, the Contractor shall immediately call 911 and shall handle the spilled material in accordance with the requirements of 6, "Disposal of Hazardous Waste," below.

6. Disposal of Hazardous Waste

a. Unless the Contractor is a licensed hazardous waste handler, the Contractor shall contract with a licensed hazardous waste handler to remove and dispose of hazardous waste materials unless the waste quantities to be transported are below threshold limits for transportation as specified in the State and Federal regulations.

b. The Contractor shall arrange for regular hazardous waste collection to comply with limits for storage of hazardous waste.

c. The Contractor may dispose of dry, empty paint cans, buckets, paintbrushes, rollers, rags and drop cloths in the trash.

d. The Contractor shall dispose of hazardous waste at facilities authorized for treatment, storage and disposal of hazardous waste only.

7. Street Sweeping

At the end of each day or as directed by the Engineer, the Contractor shall sweep roadways of all debris and excess materials attributed to the Contractor's operations.

8. Water Usage

a. The Contractor shall use the least amount of water necessary for dust control and street sweeping operations.

b. The Contractor shall not use water to flush dust and debris down the street in place of street sweeping.

9. Dumpsters and Portable Sanitary Facilities

a. If dumpsters or portable sanitary facilities are used, they shall be

stationed at least ten feet (10') away from storm drain facilities.

b. The Contractor shall arrange for regular waste collection to keep dumpsters and portable sanitary facilities from overflowing and shall regularly inspect these facilities for leaks. If a leak is discovered, the Contractor shall arrange for the repair or replacement of facilities that leak. The Contractor shall not wash the dumpsters or portable sanitary facilities on-site.

10. Earthwork

The Contractor shall maximize the control of erosion and sediment by using the Best Management Practices for erosion and sedimentation control described in the California Storm Water Best Management Practice Handbook—Construction Activity or ABAG Manual of Standards for Erosion and Sediment Control Measures.

11. Dewatering

a. The Contractor shall route water through a control device, such as a sediment trap, sediment basin or Baker tank, to remove settleable solids prior to discharging the water into the storm drain system. Refer to the California Storm Water Management Practice Handbook for these sediment control measures.

b. Approval of the control device shall be obtained in advance from the Engineer.

c. Filtration of the water following the control device may be required on a case-by-case basis.

d. If the Engineer determines that the dewatering operation would not generate an appreciable amount of settleable solids, the control device may be waived.

12. Saw Cutting

a. During saw cutting or grinding operation, use as little water as possible.

b. During saw cutting, the Contractor shall cover or barricade catch basins using filter fabric, straw bales, sandbags or fine gravel dams to keep slurry out of the storm drain system. When protecting a catch basin, the Contractor shall ensure that the entire opening of the catch basin is covered. Refer to California Storm Water Best Management Practice Handbook for these control measures.

c. The Contractor shall shovel, absorb or vacuum saw cut slurry and pick up the waste as the work progresses prior to moving to the next location, as specified elsewhere in these specifications or as directed by the Engineer.

d. If saw cut slurry enters catch basins, the Contractor shall, at the Contractor's cost, clean up the storm drain system immediately.

13. Concrete, Grout and Mortar Related Work

a. Material Handling

i. The Contractor shall avoid mixing excess amounts of fresh concrete or cement mortar on-site.

ii. The Contractor shall store concrete, grout and mortar away from storm drain facilities or drainage courses and shall ensure that these materials do not enter the storm drain system.

b. Washing of Concrete Truck and Tools

i. The Contractor shall not wash out concrete trucks or equipment into streets, gutters, storm drain system, drainage courses or creeks.

ii. The Contractor shall perform washing of concrete trucks and tools off-site or in a designated area on-site where the water will flow onto dirt or into a temporary pit in a dirt area. The Contractor shall let the water percolate into the soil and dispose of the hardened concrete in a trash container. If a suitable dirt area is not available, the Contractor shall collect the wash water and dispose of it off-site.

14. Asphalt Concrete Paving

a. Project Site Management

i. When rain is forecast within 24 hours or during wet weather, the Engineer may prevent the Contractor from paving.

ii. The Engineer may direct the Contractor to protect drainage courses by using earth dike, straw wattle or sandbag to trap and filter sediment. Refer to California Storm Water Best Management Practice Handbook for these control measures.

iii. The Contractor shall place drip pans or absorbent material under paving equipment when not in use.

iv. The Contractor shall cover catch basins and manholes when paving or applying prime coat, tack coat, seal coat, fog seal or slurry seal.

v. If the paving operation includes an on-site mixing plant, the Contractor shall comply with Merced County NPDES General Industrial Activities Storm Water Permit requirements.

vi. The Contractor shall preheat, transfer or load hot bituminous material away from storm drain system, drainage courses or creeks.

b. Paving Waste Management

The Contractor shall not sweep or wash down excess sand (placed as part of a sand seal or to absorb excess oil) into streets, gutters, storm drain system or creeks but shall collect the sand and dispose of it off-site. The Contractor shall not wash fresh asphalt concrete pavement.

15. Painting

a. General

i. The Contractor shall remove as much excess paint as possible from brushes, rollers and other tools before starting cleanup.

ii. The Contractor shall conduct cleaning of painting equipment and tools in a designated area approved by the Engineer.

iii. The Contractor shall not allow wash water from cleaning of painting equipment and tools into streets, gutters, storm drain system, drainage courses or creeks.

b. Water-Based Paint

To the maximum extent practicable, the Contractor shall dispose of wash water from water cleaning of brushes, rollers and other tools used in water-based painting work to the sanitary sewer or direct wash water onto dirt area and spade in.

c. Oil-Based Paint

The Contractor shall dispose of waste thinner and solvent and sludge from cleaning of brushes, rollers and other tools used in oil- based painting work as hazardous waste and the Contractor shall handle the waste as described in Section 6, "Disposal of Hazardous Waste," above. To the maximum extent practicable, the Contractor shall filter paint thinner and solvents for reuse.

16. Thermoplastic

a. The Contractor shall transfer and load hot thermoplastic away from drainage systems or drainage courses or creeks.

b. The Contractor shall sweep thermoplastic grindings into plastic bags. Yellow thermoplastic grindings may require special handling as they may contain paint.

C. CONTRACTOR TRAINING AND AWARENESS

1. The Contractor shall train all employees and subcontractors on the storm water pollution prevention requirements contained in these specifications.

2. The Contractor shall inform subcontractors of the storm water pollution prevention contract requirements and include appropriate subcontract provisions to ensure that these requirements are met.

3. The Contractor shall post warning signs in areas treated with chemicals.

D. BMP IMPLEMENTATION

The Contractor shall be responsible throughout the duration of the construction period for installing and maintaining the applicable BMPs and for removing and legally disposing of temporary control measures. Unless otherwise directed by the Engineer or specified elsewhere in these specifications, the Contractor's responsibility for BMP implementation shall continue throughout any temporary suspension of work ordered in conformance with the provisions in Section 8-1.06, "Suspensions," of the Standard Specifications.

Throughout the rainy season, all soil-disturbed areas of the site shall be fully protected with soil stabilization and sediment control device approved by the Engineer at the end of the same day the soil is disturbed unless fair weather is predicted the next day and the protective measures are exempt by the Engineer. The Contractor shall monitor the weather forecast on a daily basis and inform the Engineer of the forecast. The National Weather Service forecast shall be used for this purpose. If precipitation is predicted for the following day, construction schedule shall be altered as required to install appropriate BMPs or to ensure that the already installed BMPs are in good operating condition prior to the onset of rain.

E. BMP MAINTENANCE

To ensure proper implementation and effectiveness of the BMPs, the Contractor shall regularly inspect and maintain the deployed BMPs throughout the construction site. The Contractor shall identify corrective actions and the time needed to address any deficient BMPs or reinitiate any BMPs that have been discontinued. The Contractor shall keep written records of all BMP inspections, maintenance and corrective actions.

The frequency of the BMP inspection shall be as follows:

1. Prior to a forecast storm;

2. After any precipitation that causes runoff;

3. At 24-hour intervals during extended rain events; and

4. Routinely, at a minimum of once every week.

If the Contractor or the Engineer identifies a deficiency in the deployment or functioning of a BMP, the deficiency shall be corrected immediately. If requested by the Contractor and

approved by the Engineer in writing, the deficiency may be corrected at a later time or date but the corrective action shall not be later than the onset of the subsequent rain event. The correction of deficient BMPs shall be at no additional cost to the City.

F. RESPONSIBILITIES, CONSEQUENCES, AND REMEDIES

1. Conformance with the provisions of this section or other requirements in various other sections of these specifications shall not relieve the Contractor from the Contractor's responsibilities as provided in various relevant articles of Section 7, "Legal Relations and Responsibilities to the Public," of the Standard Specifications, and as specified herein.

2. For purposes of this section, costs and liabilities include, but are not limited to, fines, penalties and damages, whether assessed against the City or the Contractor, including those levied under the Federal Clean Water Act and the State Porter-Cologne Water Act.

3. If solid or liquid materials or waste, hazardous or otherwise, or pollutants originating from the Contractor's operation enter the storm drain system or water courses, the Contractor will be required to thoroughly clean up the affected storm drain facilities and water courses to the satisfaction of the Engineer. If the Contractor fails to clean up the affected facilities as required, the City will issue a stop-work order and take necessary actions to effect the cleanup of the affected facilities.

4. The Contractor shall be responsible for all costs, including fines, the City's cost of defense, the cost of cleanup by others ordered by the City, and liabilities imposed by law as a result of the Contractor's failure or negligence in complying with the requirements specified herein.

5. In accordance with the provisions of Section 7-1.05, "Indemnification," of the standard Specifications if the Contractor fails to accept or reject a tender of defense and indemnity within fifteen (15) calendar days, the City may, in addition to the remedies authorized by law, retain any sum due the Contractor until disposition has been made of all claims or suits for damages or until the Contractor accepts or rejects the tender of defense, whichever occurs first.

G. PAYMENT

Full compensation for storm water pollution control shall be considered as included in the payment for various other items of work and no additional compensation will be made therefore.

This Page is Intentionally Left Blank

Special Provisions

1. Requirements

It is required that there be constructed and completed in accordance with the Contract Documents for "Construction of **LOS BANOS CITY HALL ADA COUNTERS**" for the City of Los Banos, all work as described in these Contract Documents.

2. Description of Work

The principal components of the work to be performed under these Contract Documents include the following:

Removing the existing counters at the building department and administration and replacing with new counters that are ADA accessible and have bullet resistant glass.

Any incidental work not described in the Contract Documents which is necessary to complete the Work shall be furnished and installed as part of this contract at no additional cost to the Owner. The work shall be complete and ready for service to the satisfaction of the Owner. The Contractor shall have had the opportunity to inspect the site and observe actual working conditions during the mandatory pre-bid meeting.

3. Commencement, Prosecution and Completion of Work

The Contractor shall commence work and shall complete all of the work in accordance with the schedule and within the time stated in the bid. The capacity of the Contractor's construction plant, sequence of operations, method of operations, and the forces employed shall at all times during the continuance of the contract, be subject to the approval of the Engineer and shall be such as to ensure the completion of the work within the time specified.

4. Hours of Work

Construction work shall be completed between the hours of 7:00 a.m. and 9:00 p.m. Monday through Friday using normal construction practices. No work shall be performed on Saturday or Sunday. The Contractor may request to the Owner to perform construction outside of these specified hours. Construction work shall be completed between the hours of 7:00 a.m. and 9:00 p.m. Monday through Friday using normal construction practices.

5. Permits and Business Licenses

The Contractor will not need an Encroachment Permit from the Public Works Department prior to start of construction. The Contractor and all subcontractors working within the city limits of Los Banos shall apply for and have issued a business license from the City of Los Banos (209-827-7000) prior to commencement of work.

6. Testing

Field density tests shall be made of each compacted layer (subbase and aggregate base) as directed by the Engineer. When these tests indicate that the density of any layer of fill or portion thereof is less than the specified density, that layer shall be reworked unit the required density has been obtained.

Field density tests (compaction testing) shall be performed by a geotechnical laboratory retained by the Owner and under the supervision of a registered geotechnical engineer.

Initial compaction testing will be paid by the Owner. Retesting of areas that failed the initial testing will be paid for by the Contractor.

7. Responsibility Regarding Existing Utilities and Private Property

The existence and location of public and private utilities indicated on the drawings are not guaranteed and any additional utilities and facilities not shown on the drawings shall be investigated and protected by the

Contractor. The Contractor shall be held responsible for damage to and for maintenance and protection of existing pipelines, public utilities, drives, curbs and gutters, sidewalks, and fences. Excavation in the vicinity of existing public utility structures, underground electrical or telephone cable, oil or gas pipelines, and waterlines shall be carefully done by hand. The Contractor shall adequately protect all adjoining property and structures from damage, whether within or without of the Owner furnished rights-of-way, and shall be fully responsible for any damage to adjoining property and structures which may result from work done under this contract. The Contractor shall use extreme care during construction to prevent damage from dust to crops and adjacent property. The Contractor shall sprinkle the areas where the passage of operation of vehicles and equipment creates a dust problem, or take other preventive measures as directed by the Engineer. The Contractor shall furnish all labor, equipment, materials and means required to control dust which is in any way a result of the Contractor's operations.

The Contractor shall be responsible for all damage or injury which may result to any property, outside of the construction right-of-way or within the right-of-way where so noted, from the Contractor's operations hereunder, or otherwise, from the performance of the Agreement by said Contractor or any of his subcontractors or employees.

The Contractor shall attempt to maintain access to the residential and commercial driveways within the construction area at all times during working hours and shall provide access during non-working hours, weekends and holidays.

Payment for all work specified above shall be included in the unit or lump sum prices bid in the schedule for the various items of work.

8. Obstructions

The Contractor shall notify the Engineer and the appropriate regional notification center for operators of subsurface installation at least 3 working days, but not more than 14 calendar days, prior to performing any excavation or other work close to any underground pipeline, conduit, duct, wire or other structure. Failure to contact the notification center prohibits excavation. Regional notification centers include but are not limited to the following:

NOTIFICATION CENTER	TELEPHONE
Underground Service Alert Northern California (USA) www.usanorth811.org	811 or 1-800-227-2600

9. Materials Furnished By Owner

No labor, material, or other facilities shall be provided by the Owner unless otherwise indicated on the drawings or in the Contract Documents.

10. Materials Furnished By Contractor

Unless otherwise stipulated, the Contractor shall provide and pay for all materials, labor, water, tools, equipment, light, power, transportation, and other facilities necessary for the execution and completion of the work.

11. Schedule of Values, Material List and Substitutions

Prior to the commencement of work, and within 10 days following the signing of the contract by the Owner and the Contractor, the Contractor shall submit 2 copies of a Schedule of Values for all lump sum bid items in the Bid Schedule and a *complete* list of equipment and materials to be furnished, including all substitutions proposed to the Engineer for approval. Partial or incomplete material lists will not be considered. No substitutions will be considered thereafter. Only one request for substitution will be considered on each item of material or equipment.

12. Request for Extension of Time

All extension of time requests shall be made in writing to the Engineer within seven (7) calendar days from the delay occurrence date. In the case of continuing cause of delay, only one claim is necessary.

13. Rights-of-Way

The Contractor shall not be entitled to extra compensation for hardships and increased cost caused by the work being adjacent to telephone-telegraph lines and guy wires, power lines and guy wires, buildings, fences, pipelines, ditches, roadways, and other obstacles which may physically restrict or limit the use of construction equipment. In some cases, such physical confinement may necessitate special methods of construction of the work. If the Contractor desires to utilize additional area, he shall obtain the necessary approvals from the landowner. No additional compensation shall be paid to the Contractor for the cost of obtaining additional right-of-way or for the inability to obtain such.

14. Coordination with Other Work

Other work including but not necessarily restricted to relocation of power and telephone poles, installation of a gas line and relocation of water meters may be in progress near or at the construction site at the time the Contractor is in performance of the work specified herein. The Contractor shall coordinate his work with that of others so that prosecution of all work will proceed smoothly.

15. Disposal of Waste Materials

Waste material shall be disposed of in accordance with local regulatory requirements. Provide watertight conveyance for liquid, semi-liquid or saturated solids which tend to bleed during transport. Liquid loss from transported materials is not permitted, whether being delivered to construction site or hauled away for disposal. Fluid materials hauled for disposal must be specifically acceptable at selected disposal site.

16. Noise Control

Conduct operations to cause least annoyance to residents in vicinity of work, and comply with applicable local ordinances. Equip compressors, hoists, and other apparatus with mechanical devices necessary to minimize noise and dust. Equip compressors with silencers on intake lines. Equip gasoline or oil-operated equipment with silencers or mufflers on intake and exhaust lines.

17. Water Supply

Water will be available to the Contractor in performance of the work without charge from all Owner fire hydrants. Prior to the use of any hydrant the Contractor shall notify the Owner and obtain and install a meter furnished by the Public Works Department on the fire hydrant. It will be the Contractor's responsibility to convey the water to the work site. Regardless of the method of conveyance chosen, it shall not be cause for closure of any streets nor shall it create a nuisance to nearby residents. An air gap shall be maintained between the hose or pipe discharge to prevent possible backflow in the event of distribution system pressure loss. The Contractor shall pay a One Thousand Dollar ($1,000) deposit per meter for the use of the fire hydrant meter. The deposit may be refunded in full if the fire hydrant meter is returned undamaged.

18. Notifications

The Owner will notify the Contractor in writing of any non-compliance with the foregoing provisions or of any environmentally objectionable acts and corrective action to be taken. State or local agencies responsible for verification of certain aspects of the environmental protection requirements shall notify the Contractor in writing, through the Owner, of any non-compliance with State or local requirements. The Contractor shall, after receipt of such notice from the Owner or from the regulatory agency through the Owner, immediately take corrective action. Such notice, when delivered to the Contractor or his authorized representative at the site of the work, shall be deemed sufficient for the purpose. If the Contractor fails or refuses to comply promptly, the Owner may issue an order stopping all or part of the work until satisfactory corrective action has been taken. No part of the time lost due to any such stop orders shall be made the subject of a claim for extension of time or for excess costs or damages by the Contractor unless it is later determined that the Contractor was in compliance.

19. Work Not Listed in Proposal

It is the intent of the plans, specifications and contract documents to provide for the construction of completed and finished facilities and works of improvement unless otherwise specifically provided. Except for authorized changes in the work, payment for said complete and finished facilities and works of improvement will be made only on the basis of the contract items of work listed in the proposal. All other work, including the furnishing of plants, labor, materials, tools, equipment, and incidentals, provided for in the plans, specifications and contract documents, or required for the proper completion of the work as a whole, for which no separate payment has been provided shall be a supplementary obligation of the Contractor and payment therefore shall be considered included in the prices paid for the various contract items of work listed in the proposal.

20. Submittals

The Contractor shall submit to the Engineer, a minimum of six sets, hard copies, or one electronic copy of the following submittals for review and approval:

1. 03 15 14 - DRILLED ANCHORS
    a. PRODUCT DATA, ICC EVALUATION SERVICE REPORTS, DSA APPROVAL LETTERS
2. 05 40 00 – COLD FORMED METAL FRAMING
    a. PRODUCT DATA (INCLUDING INSTALLATION METHODS) AND MATERIALS LIST.
3. 06 41 16 - CASEWORK
    a. SHOP DRAWINGS, MANUFACTURER'S SPECIFICATIONS, COLOR SAMPLES, MOCK-UP, WI CERTIFICATION.
4. 06 61 16 - SOLID POLYMER FABRICATIONS
    a. SHOP DRAWINGS, MANUFACTURER'S SPECIFICATIONS, COLOR SAMPLES, MOCK-UP, WI CERTIFICATION.
5. 08 41 13 – ALUMINUM ENTRANCES AND STOREFRONTS
    a. PRODUCT DATA, SHOP DRAWINGS AND WARRANTIES
6. 08 80 00 - GLAZING
    a. PRODUCT DATA, MATERIALS LIST, SAMPLES AND CERTIFICATES.
7. 09 22 16 – NON-STRUCTURAL METAL FRAMING
    a. PRODUCT DATA (INCLUDING INSTALLATION METHODS) AND MATERIALS LIST.
8. 09 29 00 - GYPSUM BOARD
    a. PRODUCT DATA, FASTENING SCHEDULE AND SAMPLES.
9. 09 30 50 – TILE SETTING MATERIALS AND ACCESORIES
    a. PRODUCT DATA, COLORS, SAMPLES, CERTIFICATES, MAINTENANCE MATERIAL AND WARRANTIES.
10. 09 90 00 - PAINTING
    a. PRODUCT DATA, MATERIALS LIST, COLORS, MAINTENANCE INFORMATION AND WARRANTIES.
11. 13 10 10 – BULLET RESISTANT PARTITIONS AND EQUIPMENT

a. PRODUCT DATA, MATERIALS LIST, COLORS, MAINTENANCE INFORMATION AND WARRANTIES.

12. 26 00 00 – ELECTRICAL

a. A DEFERRED SUBMITTAL INCLUDING DESIGN, SINGLE LINE DRAWINGS, PRODUCT DATA, MATERIALS LIST, COLORS, MAINTENANCE INFORMATION.

Within 10 days after the effective date of the Agreement and before starting to perform any work, the Contractor shall submit to the Engineer for review and approval:

1. A work schedule indicating the times for starting and completing the various stages of the work. No progress payment shall be made to Contractor until an acceptable schedule has been submitted to the Engineer.
2. A Schedule of Values - a breakdown of each lump sum price to be used to determine deductive change orders, if necessary.
3. A complete list of equipment and materials to be furnished
4. City of Los Banos Business License for Contractor and all subcontractors

If more than TWO submittals for a single item are required because of incorrect or insufficient data, or the submittal is unacceptable, or because the Contractor wishes to change previously approved material, then all costs incurred by the Owner for the additional review shall be deducted from monies due the Contractor.

A revised work schedule shall be submitted within 5 days of request by the Engineer. No future progress payments shall be made to Contractor until an acceptable schedule has been submitted to Engineer.

21. Bid Item Descriptions

Bid Item No. 1 – Mobilization and Demobilization:

Payment for this item shall include full compensation for all labor, materials, tools, equipment and incidentals making up the cost of mobilization, move-in, move-out, all necessary bonds, insurance, permits, licenses, and fees required during the performance of the work as specified. This item also includes demobilization, including the removal of all equipment, supplies, personnel and incidentals from the project at the end of construction. Payment for mobilization shall be made with the first progress payment and shall not exceed 80 percent of the bid item amount. Payment for demobilization shall be made with the last progress payment and shall not be less than 20 percent of the bid item amount.

Bid Item No. 2 – Worker Protection:

Payment for this item shall be considered full compensation for all labor, materials, tools, equipment and incidentals for providing for worker protection from caving ground in excavations and other hazards that may occur during construction, in accordance with the Plans and specifications. This bid item will be paid for by Lump Sum, prorated, based on percentage of contract work completed.

Bid Item No. 3 – Dust Control:

Payment under this item shall be considered full compensation for all labor, materials, tools, equipment and incidentals required to perform dust control measures for the project limits in accordance with these specifications. This bid item will be paid for by Lump Sum, prorated, based on percentage of contract work completed.

Bid Item No. 4 - Demolition

Payment for this item shall include full compensation for all labor, materials, tools, equipment and

incidentals making up the cost of all work involved in demolishing within project site as described in the Specifications and shown on the Plans. This bid item will be paid for by Lump Sum, prorated, based on percentage of work completed.

Bid Item No. 5 – ADA Counter Construction

Payment under this item shall be considered full compensation for all labor, materials, tools, equipment and incidentals required to furnish and install two ADA accessible counters as shown and specified, including base, metal framing, countertop and all other work necessary to result in a complete and operating counter in accordance with the Plans and Specifications. This bid item will be paid for lump sum.

Bid Item No. 6 –Bullet-Resistant Partition and Equipment

Payment under this item shall be considered full compensation for all labor, materials, tools, equipment and incidentals required to furnish and install two bullet-resistant partitions as shown and specified, including partition, bullet-resistant glass, and all other work necessary to result in a complete and operating counter in accordance with the Plans and Specifications. This bid item will be paid for lump sum.

Add Alternative No. 1 – Accelerate Schedule

Payment under this item shall be considered full compensation for all labor, materials, tools, equipment and incidentals required to accelerate the construction schedule to 4 weeks of preparatory work and one week of construction. This bid item will be paid for lump sum.

Basis of Comparison of Bids: Bids will be compared on the basis of the Base Bid amount exclusive of alternates. The project will be awarded to the lowest responsible, responsive bidder.

Bids are required for the entire work. The Bidder shall set forth for each item of work, in clearly legible figures, total for the item in the respective spaces provided for this purpose.

Technical Provisions

This Page is Intentionally Left Blank

SECTION 01 11 00

DESCRIPTION OF WORK AND SCHEDULE CONSTRAINTS

PART 1 GENERAL

1.1 WORK INCLUDED

A. The Work consists of furnishing all labor, materials and equipment necessary to demolish and rebuild two ADA accessible service counters in the City of Los Banos, in accordance with the Plans and the Specifications.

B. The construction site is located in Merced County in Los Banos, California.

C. The primary components are generally described as follows:

1. Demolish the two existing service counters.

2. Install two new service counters with bullet-resistant glass.

3. Preparatory Work - Coordinating with the City regarding the closing of the work areas, preparing submittals, submittal review time, ordering materials, etc.

D. The Contractor shall begin work within ten (10) calendar days after receipt of official Notice to Proceed from the Owner.

1.2 TIME OF COMPLETION

A. The Contractor shall substantially complete all work within forty (40) calendar days including 30 days of preparatory work and 10 days of construction unless the period for completion is extended otherwise by the Contract Documents. The work shall be finally complete within an additional thirty (30) calendar days. The Contractor shall diligently prosecute the work to completion on or before the completion date indicated on the Notice to Proceed.

1.3 TIME CONSTRAINTS

A. Contractor shall supervise, inspect, and direct the Work competently and apply such skills and expertise as may be necessary to perform the Work in accordance with the Contract Documents. Contractor shall be solely responsible for the specific means, methods, techniques, sequence, or procedure of construction required to complete the project as specified by the Contract Documents. Contractor shall be responsible to see that the completed Work complies accurately with the Contract Documents.

B. Given the time constraints for Bullet Resistant Glass System, the timing for Bullet Resistant Glass System could be phased after substantial completion occurs.

C. City Hall operations must continue without interruption during construction activities. Two options for sequencing of work are either closing one counter at a time or closing both counters. Either way, staff should be able to continue to work in the office areas behind the counters.

D. The City desires to complete this project as soon as possible. To facilitate the completion of the work, the contractor may work Saturdays and Sundays.

END SECTION

SECTION 01 11 05

ENGINEER'S STATUS DURING CONSTRUCTION

PART 1 GENERAL

1.1 OWNER'S REPRESENTATIVE

A. Engineer will be Owner's representative during the construction period. The duties and responsibilities and the limitations of authority of Engineer as Owner's representative during construction are set forth in these Specifications and will not be changed without written consent of Owner and Engineer.

1.2 VISITS TO SITE

A. Engineer will make visits to the Site at intervals appropriate to the various stages of construction as Engineer deems necessary in order to observe as an experienced and qualified design professional the progress that has been made and the quality of the various aspects of Contractor's executed Work. Based on information obtained during such visits and observations, Engineer, for the benefit of Owner, will determine, in general, if the Work is proceeding in accordance with the Contract Documents. Engineer will not be required to make exhaustive or continuous inspections on the Site to check the quality or quantity of the Work. Engineer's efforts will be directed toward providing for Owner a greater degree of confidence that the completed Work will conform generally to the Contract Documents. On the basis of such visits and observations, Engineer will keep Owner informed of the progress of the Work and will endeavor to guard Owner against defective Work.

B. Engineer's visits and observations are subject to all the limitations on Engineer's authority and responsibility set forth in Section 1.5, below. Particularly, but without limitation, during or as a result of Engineer's visits or observations of Contractor's Work Engineer will not supervise, direct, control, or have authority over or be responsible for Contractor's means, methods, techniques, sequences, or procedures of construction, or the safety precautions and programs incident thereto, or for any failure of Contractor to comply with Laws and Regulations applicable to the performance of the Work.

C. Review of the Work by the Engineer shall not relieve the Contractor of the obligation to fulfill all conditions of the Contract.

D. No oral or telephonic agreement or conversation with any officer, agent or employee of the Owner or the Engineer, or with the Engineer, either before or after execution of the Contract, shall affect or modify any of the terms or obligations contained in any of the Contract Documents.

E. The Contractor shall pay the Owner for all overtime review in accordance with existing resolutions or fee schedules of the Owner, unless the charges for such inspection have been specifically waived in the Contract Documents. Overtime charges will be made for all reviews on Saturdays, Sundays and State holidays, and hours worked by the reviewer other than those of the normal working day.

1.3 AUTHORIZED VARIATIONS IN WORK

A. Engineer may authorize minor variations in the Work from the requirements of the Contract Documents which do not involve an adjustment in the Contract Price or the Contract Times and are compatible with the design concept of the completed Project as a functioning whole as indicated by the Contract Documents. These may be accomplished by a Field Order and will be binding on Owner and also on Contractor, who shall perform the Work involved promptly. If Owner or Contractor believes that a Field Order justifies an adjustment in the Contract Price or Contract Times, or both, and the parties are unable to agree on entitlement to or on the amount or extent, if any, of any such adjustment, a Claim may be made therefore as provided within the Contract Documents.

1.4 REJECTING DEFECTIVE WORK

A. Engineer will have authority to reject Work which Engineer believes to be defective, or that Engineer believes will not produce a completed Project that conforms to the Contract Documents or that will prejudice the integrity of the design concept of the completed Project as a functioning whole as indicated by the Contract Documents. Engineer will also have authority to require special inspection or testing of the Work, whether or not the Work is fabricated, installed, or completed. Neither this authority nor the Engineer's good faith judgment to reject or not reject any work shall subject the Engineer to any liability or cause of action by the Contractor, subcontractors, or any other suppliers or persons performing work on the Contract.

1.5 LIMITATIONS ON ENGINEER'S AUTHORITY AND RESPONSIBILITIES

A. Engineer will not supervise, direct, control, or have authority over or be responsible for Contractor's means, methods, techniques, sequences, or procedures of construction, or the safety precautions and programs incident thereto, or for any failure of Contractor to comply with Laws and Regulations applicable to the performance of the Work. Engineer will not be responsible for Contractor's failure to perform the Work in accordance with the Contract Documents.

B. Engineer will not be responsible for the acts or omissions of Contractor or of any Subcontractor, any Supplier, or of any other individual or entity performing any of the Work.

C. Engineer's review of the final Application for Payment and accompanying documentation and all maintenance and operating instructions, schedules, guarantees, bonds, certificates of inspection, tests and approvals, and other documentation required to be delivered will only be to determine generally that their content complies with the requirements of, and in the case of certificates of inspections, tests, and approvals that the results certified indicate compliance with the Contract Documents.

D. The limitations upon authority and responsibility shall also apply to, the Engineer's field representative.

END SECTION

SECTION 01 11 10

COORDINATION OF WORK

PART 1 GENERAL

1.1 RESPONSIBILITY OF CONTRACTOR

A. If any part of the Work depends for proper execution or results upon the work of others, the Contractor shall inspect and promptly report to the Engineer any apparent discrepancies or defects in such work of others that render it unsuitable for such proper execution and results. Failure of the Contractor to so inspect and report shall constitute an acceptance of the work of others as fit and proper except as to defects which may develop in the work of others after execution of the Work by the Contractor.

1.2 WORK INVOLVED WITH EXISTING SYSTEM

A. Existing materials and equipment removed not designated to be salvaged for Owner in the execution of the Work shall become the property of the Contractor and shall be removed from, and disposed of, off the site by the Contractor in an acceptable and lawful manner.

1.3 COORDINATION OF WORK

A. The Contractor shall maintain overall coordination for the execution of the Work. Based on the Construction Schedule prepared in accordance with these Specifications, he shall obtain from each of his subcontractors a similar schedule and shall be responsible for all parties maintaining these schedules or for coordinating required modifications.

1.4 OWNER FURNISHED ITEMS

A. The following items will be furnished by the Owner to be installed by the Contractor, as detailed on the Plans and Specifications.

1. None

END SECTION

This Page is Intentionally Left Blank

SECTION 01 22 00

EXPLANATION OF BID ITEMS

PART 1 GENERAL

The Contract payment for the specified items of work as set forth in the Bid Schedule shall be full compensation for furnishing all labor, materials, methods or processes, implements, tools, equipment and incidentals and for doing all work involved as required by the provisions of the Contract Documents for a complete in place and operational system.

A. Unless otherwise specified in the Specifications, quantities of work shall be determined per each, or from measurements or dimensions in a horizontal plane. All materials shall be measured on the basis of “in place” quantities and paid for using the units listed in the bid schedule.

B. Except as noted, the Engineer will make field measurements of unit price items in order to determine the quantities of the various items as a basis for payment. On all unit price items, the contractor will be paid for the actual amount of the work performed in accordance with the contract documents, as computed from field measurements.

1. Work or quantities not listed in the description of bid items are considered incidental to other construction and will not be separately measured or paid for. Compensation for such work and/or material shall be included in the prices paid for other items of work.

1.2 BID ITEMS

See Bid Item Descriptions in the Special Provisions Section 21.

END SECTION

This Page is Intentionally Left Blank

SECTION 01 33 00

SUBMITTAL PROCEDURES

PART 1 GENERAL

1.1 WORK INCLUDED

A. The work described in this section includes general requirements and procedures related to the preparation and transmission of submittals to include Shop Drawings, Samples, Manuals, and Record Drawings

1.2 RELATED WORK

A. General Provisions and Special Provisions

B. Section 01 33 01 – Master List of Submittals

C. Individual equipment specifications

1.3 GENERAL

A. Before submitting a Shop Drawing or Sample, Contractor shall have:

1. Reviewed and coordinated the Shop Drawing or Sample with other Shop Drawings and Samples and with the requirements of the Work and the Contract Documents;

2. Determined and verified all field measurements, quantities, dimensions, specified performance and design criteria, installation requirements, materials, catalog numbers, and similar information with respect thereto;

3. Determined and verified the suitability of all materials and equipment offered with respect to the indicated application, fabrication, shipping, handling, storage, assembly, and installation pertaining to the performance of the Work; and

4. Determined and verified all information relative to Contractor's responsibilities for means, methods, techniques, sequences, and procedures of construction, and safety precautions and programs incident thereto.

B. Submit each submittal document under separate cover or transmittal. Transmittal shall include the following identification data, as applicable:

1. Contract number

2. Project name and location

3. Submittal number and revision

4. Product identification

5. Applicable contract drawing number, specification section, and paragraph number

6. Stamp Space: Blank space of approximately 2-1/2 inches high by 4 inches wide adjacent to the identification data to receive Engineer's status stamp.

7. Contractor’s certification statement as described below

C. To each submittal affix the following signed Certification Statement.

1. "Certification Statement: By this submittal, we hereby represent that we have determined and verified all field measurements, field construction criteria, materials, dimensions, catalog numbers and pertinent data and we have checked and coordinated each item with other applicable approved drawings and all Contract requirements."

D. With each submittal, Contractor shall give Engineer specific written notice of any variations that the Shop Drawing or Sample may have from the requirements of the Contract Documents. This notice shall be set forth in a written communication separate from the Shop Drawings or Sample submittal; and, in addition, in the case of Shop Drawings by a specific notation made on each Shop Drawing submitted to Engineer for review and approval of each such variation.

E. Furnish neat, legible, and sufficiently explicit detail to enable proper review for Contract compliance.

F. Contractor assumes all risks of error and omission.

G. Work performed before approval, or not conforming to approved submittals, shall be at Contractor's risk.

H. Submittal requirements contained in this specification are in addition to specific submittal requirements contained in individual equipment specification sections.

1.4 APPROVAL PROCESS

A. Engineer will provide timely review of Shop Drawings and Samples in accordance with the Schedule of Submittals acceptable to Engineer. Engineer’s review and approval will be only to determine if the items covered by the submittals will, after installation or incorporation in the Work, conform to the information given in the Contract Documents and be compatible with the design concept of the completed Project as a functioning whole as indicated by the Contract Documents.

B. Engineer’s review and approval will not extend to means, methods, techniques, sequences, or procedures of construction or to safety precautions or programs incident thereto.

C. Engineer’s review and approval of a separate item as such will not indicate approval of the assembly in which the item functions.

D. Engineer’s review and approval of a Shop Drawing or Sample shall not relieve Contractor from responsibility for any variation from the requirements of the Contract

Documents unless Contractor has given Engineer specific written notice of any variations that the Shop Drawing or Sample may have from the Contract Documents and Engineer has given written approval of each such variation by specific written notation thereof incorporated in or accompanying the Shop Drawing or Sample. Engineer will document any such approved variation from the requirements of the Contract Documents in a Field Order.

E. Engineer's review and approval of a Shop Drawing or Sample, or of a variation from the requirements of the Contract Documents, shall not, under any circumstances, change the Contract Times or Contract Price, unless such changes are included in a Change Order.

F. Submittals will be returned, marked with one of the following classifications:

1. NO EXCEPTIONS TAKEN: Accepted subject to its compatibility with further submittals and additional partial submittals for portions of the work not covered in this submittal. Does not constitute approval or deletion of specified or required items not shown in the partial submittal.

2. MAKE CORRECTIONS NOTED: Same as 1.a., except that minor corrections as noted shall be made by the Contractor. No re-submittal required.

3. REVISE AND RESUBMIT: Rejected because of major inconsistencies or errors which shall be resolved or corrected by the Contractor prior to subsequent review by the Engineer. Re-submittal required.

4. SUBMIT SPECIFIED ITEM: Minor item in submittal missing or incomplete. Submit data, specifications, drawings covering specified item only. Submittal shall be referenced to the main submittal under review.

5. REJECTED: Submitted material does not conform to Plans and Specifications in major respect, i.e.: wrong item, wrong size, model, capacity, or material. Re-submittal required.

PART 2 SUBMITTAL DOCUMENTS

2.1 SHOP DRAWINGS

A. Unless otherwise noted in the individual specification sections, submit five (5) sets of shop drawings.

B. All catalog and specification sheets shall be clearly marked to indicate the specific model number and configuration to be used. Items not applicable to the project shall be crossed out.

C. Show complete and detailed fabrication; assembly and installation details; wiring and control diagrams; catalog data; pamphlets; descriptive literature; and performance and test data.

D. Include calculations or other information sufficient to show comprehensive description of structure, equipment, or system provided and its intended manner of use.

E. Include Manufacturer's installation recommendations.

2.2 SAMPLES

A. Unless otherwise noted in the individual specification sections, submit three (3) samples of each item.

B. Samples shall be representative of the actual material proposed for use in the project and of sufficient size to demonstrate design, color, texture, and finish.

C. Permanently attach to each sample

1. The contract number

2. Project name and location

3. Product identification

4. Applicable contract drawing and specification section number

5. Subcontractor's, vendor's and/or manufacturer's name, address, and telephone number.

D. Certain samples may be tested for specific requirements by the Owner and/or Engineer prior to approval. Failure of sample to pass tests will be sufficient cause for refusal to consider further samples of the same brand and make.

E. Rejected samples will be returned upon request, and resubmittals shall consist of new samples.

2.3 RECORD DRAWINGS

A. Maintain 1 record copy of Contract Documents at site in good order and annotated to show revisions made during construction. Keep annotations current for possible inspection.

1. Make record drawings available to Engineer at all times during life of Contract.

2. Drawings: Made part of record drawings and to include:

a. Contract Drawings: Annotate or redraft, as required, to show revisions, substitutions, variations, omissions, and discrepancies made or discovered during construction concerning location and depth of utilities, piping, ductbanks, conduits, manholes, pumps, valves, vaults, and other equipment. Make revisions and show on all drawing views with actual dimensions established to permanent points.

b. Working/Layout Drawings: When required as submittals, record actual layouts of conduit runs between various items of electrical equipment for power, control, and instrumentation; wire sizes, numbers, and functions; configuration of conduits; piping layouts; and duct layouts.

3. Before preliminary inspection, furnish reproducible of record drawings. At completion of Contract and before final payment is made, furnish Engineer 1 set of reproducibles of finally approved record drawings reflecting revisions herein described.

2.4 OPERATION AND MAINTENANCE MANUALS

A. Furnish Operation and Maintenance Manuals for various types of equipment and systems, as required by Contract Documents. Operation and Maintenance Manuals shall be provided for all mechanical and electrical equipment. Unless otherwise indicated, furnish separate manual for each piece of equipment and system. If manual contains other items or equipment, indicate where specified items are located in manual. Include in manual complete information necessary to operate, maintain, and repair specific equipment and system furnished under this Contract, and include the following specific requirements;

1. Contents.

a. Table of Contents and Index.

b. Brief description of equipment/system and principal components.

c. Starting and stopping procedures, both normal and emergency.

d. Installation, maintenance, and overhaul instructions including detailed assembly drawings with parts list and numbers, and recommended spare parts list with recommended quantity, manufacturer's price, supplier's address, and telephone number.

e. Recommended schedule for servicing, including technical data sheets that indicate weights and types of oil, grease, or other lubricants recommended for use and their application procedures.

f. One copy of each component wiring diagram and system wiring diagram showing wire size and identification.

g. One approved copy of each submittal with changes made during construction properly noted, including test certificates, characteristic curves, factory and field test results.

h. For electrical systems, include dimensioned installation drawings, single line diagrams, control diagrams, wiring and connection diagrams, list of material for contactors, relays and controls, outline drawings showing relays, meters, controls and indication equipment mounted on equipment or inside cubicles, control and protective schematics, and recommended relay settings.

2. Material:

   a. Covers: Oil, moisture, and wear resistant 9 inches by 11-1/2 inches size.

   b. Pages: 60 pound paper 8-1/2 inches by 11 inches size with minimum of 2 punched holes 8-1/2 inches apart reinforced with plastic, cloth, or metal.

   c. Fasteners: Metal screw post or Acco metal strap type.

   d. Diagrams and Illustrations: Attach foldouts, as required.

B. Copies:

1. Submit five (5) preliminary copies of manuals for review and approval no later than date of shipment of equipment. Installation shall not begin until manuals are accepted by Engineer. Include in preliminary copies all items required under “Contents” above. Three copies will be marked and returned to Contractor.

2. Deliver seven (7) copies of finally approved manuals to Engineer before startup.

PART 3 EXECUTION

NOT USED

END SECTION

SECTION 01 33 01

MASTER LIST OF SUBMITTALS

PART 1 GENERAL

A. The following submittals are required for the Work. Other submittals may be required as requested by the Owner or Owner's Representative.

1. Post-Bid Pre-Award Construction Schedule

2. Post-Award Construction Schedule

3. Contractor's Plan of Activities (submitted weekly)

4. Copies of all agency permits, including, but not limited to:

5. Other submittals as listed in the Special Provisions Section 20.

6. All other administrative and conditional submittals as explained in this Section 01 33 00 – Submittal Procedures.

END SECTION

This Page is Intentionally Left Blank

SECTION 01 35 00

MATERIAL SUBSTITUTION PROCEDURES

PART 1 GENERAL

1.1 GENERAL

A. The materials furnished and used shall be new, except as may be provided elsewhere in these Specifications, or on the Plans.

B. All materials required to complete the work under this contract shall be furnished by the Contractor, unless otherwise stated.

C. It shall be the duty of the Contractor to call the Engineer's attention to apparent errors or omissions and request instruction before proceeding with the Work. The Engineer may, by appropriate instructions, correct said apparent errors and omissions, which instructions shall be as binding upon the Contractor as though contained in the original Contract Documents.

1.2 DEFINITIONS

A. Substitutions: Requests for changes in products, materials, equipment, and methods of construction required by Contract Documents proposed by the Contractor.

B. Revisions: Changes to Contract Documents requested by Owner or Engineer.

C. Options: Specified options of products and construction methods included in Contract Documents.

1.3 TRADE NAMES AND ALTERNATIVES

A. Wherever an article, or any class of materials, is specified by the trade name or by the name of any particular patentee, manufacturer or dealer, or by reference to the catalog of any such manufacturer or dealer, it shall be taken as intending to mean and specify the article or material described or any other equal thereto in quality, finish and durability, and equally as serviceable for the purpose for which it is or they are intended. The intent of the Plans and Specifications is to specify highest grade standard equipment, and it is not the intent of these Plans and Specifications to exclude or omit the products of any responsible manufacturer, if such products are equal in every practical respect to those mentioned herein, as determined by the Engineer.

1.4 SAMPLES

A. At the option of the Engineer, the source of supply of materials for the Work shall be subject to tests and inspection before the delivery is started and before such materials are used in the Work. Samples representative of the character and quality of materials shall be submitted by the Contractor. Samples shall be of sufficient quantities or amounts for testing or examination.

B. All tests of materials furnished by the Contractor shall be made in accordance with the commonly recognized standards of national technical organizations, and such special methods and tests as are prescribed in the Contract Documents.

C. The Contractor shall furnish such samples of materials as are requested by the Engineer, without charge. No material shall be used until the Engineer has had the opportunity to test or examine such materials. Samples will be secured and tested whenever necessary to determine the quality of the material. Samples and test specimens prepared at the jobsite, such as concrete test cylinders, shall be taken or prepared by the Engineer, or his designated representative, in the presence and with the assistance of the Contractor.

1.5 SUBMITTALS

A. Material Submittals shall be made in accordance with Section 01 33 00 – Submittals.

1.6 INSPECTION OF MATERIALS BY THE CONTRACTOR

A. Contractor shall make a close inspection of all materials as delivered, and shall promptly return all defective materials without waiting for their rejection by the Engineer.

1.7 CERTIFICATES OF COMPLIANCE

A. A Certificate of Compliance may be required for certain materials and equipment that become final products of the completed Work. Certificates of Compliance shall be furnished prior to the use of any materials for which these Specifications require that such a certificate be furnished. In addition, when so authorized in these Specifications, the Engineer may permit the use of certain materials or assemblies prior to sampling and testing if accompanied by a Certificate of Compliance.

B. The Certificate shall be signed by the manufacturer of the material or the manufacturer of assembled materials and shall state that the materials involved comply in all respects with the requirements of the Specifications.

C. A Certificate of Compliance shall be furnished with each lot of material delivered to the Work and the lot so certified shall be clearly identified in the certificate.

D. All materials used on the basis of a Certificate of Compliance may be sampled and tested at any time. The fact that material is used on the basis of a Certificate of Compliance shall not relieve the Contractor of responsibility for incorporating material in the Work which conforms to the requirements of the Plans and Specifications and any such material not conforming to such requirements will be subject to rejection whether in place or not.

E. The City of Los Banos reserves the right to refuse to permit the use of material on the basis of a Certificate of Compliance.

1. The form of the Certificate of Compliance and its disposition shall be as directed by the Engineer.

1.8 MANUFACTURER TESTING

A. At the option of the Engineer, materials and equipment to be supplied under this Contract will be tested and inspected either at their place of origin or at the site of the Work. The Contractor shall give the Engineer written notification well in advance of actual readiness of materials and equipment to be tested and inspected at point of origin.

1. Satisfactory tests and inspections at the point of origin shall not be construed as a final acceptance of the materials and equipment nor shall such tests and inspections preclude retesting or re-inspection at the site of the Work.

2. Materials and equipment which will require testing and inspection at the place of origin shall not be shipped prior to such testing and inspection.

1.9 MANUFACTURERS' RECOMMENDATIONS

A. All equipment specified and used in the project shall be installed in accordance with the approved manufacturer's current written recommendations.

B. All such equipment, material, etc., shall be of the manufacturer's latest system or line.

1.10 SUBSTITUTIONS

A. Conditions: Contractor's substitutions shall be considered when one or more conditions are satisfied, as determined by the Engineer. (The Contractor's submittal and Engineer's acceptance of Shop Drawings, Product Data or Samples that relate to construction activities not complying with the Contract Documents does not constitute an acceptable or valid request for substitution, nor does it constitute approval.)

1. Extensive revisions to Contract Documents are not required.

2. Proposed changes are in keeping with the general intent of the Contract Documents.

3. Request is timely, fully documented and properly submitted.

4. Request is directly related to an "or equal" clause or similar language in the Contract Documents.

5. The specified product or method of construction cannot be provided within the Contract Time. The request shall not be considered if the product or method cannot be provided as a result of failure to pursue the Work promptly or coordinate activities properly.

6. The specified product or method of construction cannot receive necessary approval by governing authority, and the requested substitution can.

7. Substantial advantage is offered the Owner, in terms of cost, time, energy conservation or other considerations of merit, after deducting offsetting responsibilities the Owner may be required to bear.

    a. Additional responsibilities for the Owner may include additional compensation to the Engineer for redesign and evaluation services, increased cost of other construction by the Owner or separate Contractors, and similar considerations.

    b. Contractor shall provide all data in support of any proposed substitute or “or-equal” at Contractor’s expense.

8. Specified product or method of construction cannot be provided in a manner that is compatible with other materials, and where the Contractor certifies that the substitution will overcome the incompatibility.

9. Specified product or method of construction cannot be coordinated with other materials, and where the Contractor certifies that the proposed substitution can be coordinated.

10. Specified product or method of construction cannot provide a warranty required by the Contract Documents and where the Contractor certifies that the proposed substitution provide the required warranty.

1.11 SUBSTITUTION REQUEST FORM

A. Use Substitution Request Form in on page 01 35 00-5.

B. Submit one form (4 copies) for each request.

END SECTION

SUBSTITUTION REQUEST FORM

TO: _____

PROJECT: _____

We hereby submit for your consideration the following product instead of the specified item for the above project:

SECTION: _____ PARAGRAPH: _____ SPECIFIED ITEM: _____

_____

Proposed Substitution:_____

_____

Attach: 1) Complete technical data, including laboratory tests, if applicable.

2) Complete information on changes to Drawings and/or Specifications which proposed substitution will require for its proper installation.

A. Does the substitution affect dimensions on Drawings?

_____

_____

_____

B. Will the undersigned pay for changes to the project design, including engineering and detailing costs caused by the requested substitution?

_____

_____

_____

C. What affect does substitution have on other trades?

_____

_____

_____

D. Differences between proposed substitution and specified item?

_____

_____

_____

E. Manufacturer's guarantees of the proposed and specified items are:

____Same _____ Different (explain on attached sheet)

SUBSTITUTION REQUEST FORM

The undersigned states that the function, appearance and quality are equivalent or superior to the specified item.

Submitted By:

Signature _____

Firm _____

Address _____

Date _____

Telephone _____

For Use by Design Consultant
Accepted Accepted as Noted Not Accepted Received Late By_____ _____ Date_____ Remarks_____ _____

SECTION 01 43 00

QUALITY CONTROL AND TESTING

PART 1 GENERAL

1.1 NOTICE OF DEFECTS

A. Prompt notice of all defective Work of which Owner or Engineer has actual knowledge will be given to Contractor.

B. All defective Work may be rejected, ordered to be corrected, or accepted, at the discretion of the Owner and Engineer.

1.2 ACCESS TO WORK

A. Owner, Engineer, their consultants and other representatives and personnel of Owner, independent testing laboratories, and governmental agencies with jurisdictional interests shall have access to the Site and the Work at reasonable times for their observation, inspecting, and testing. Contractor shall provide them proper and safe conditions for such access and advise them of Contractor's Site safety procedures and programs so that they may comply therewith.

1.3 MATERIALS AND EQUIPMENT

A. Materials and equipment shall be subject to the requirements of Section 01 35 00 – Material Substitution Procedures.

1.4 PROJECT SITE TESTING

A. Contractor shall give Engineer timely notice of readiness of the Work for all required inspections, tests, or approvals and shall cooperate with inspection and testing personnel to facilitate required inspections or tests.

B. Except for specified material suitability tests, all initial routine tests of materials shall be at the expense of the Owner and shall be performed by an independent certified laboratory designated by the Owner. Whenever a specified percent relative compaction test is required and the material or portion thereof so tested fails to meet or exceed the relative compaction specified, all subsequent retesting shall be performed at the expense of the Contractor.

C. All routine tests of materials shall be at the expense of the Contractor, under direction of the Engineer. Testing shall be by an independent certified laboratory approved by the Engineer. Payment for testing shall be included in the price paid for other items of work. No separate payment will be made.

D. All material suitability tests shall be at the expense of the Contractor. Testing shall be by an independent certified laboratory approved by the Engineer.

1.5 TEST STANDARDS

A. All sampling, specimen preparation, and testing of materials shall be in accordance with the standards of nationally recognized technical organizations.

B. The physical characteristics of all materials not particularly specified shall conform to the latest standards published by the ASTM, where applicable.

1.6 UNCOVERING WORK

A. If any Work (or the work of others) that is to be inspected, tested, or approved is covered by Contractor without concurrence of Engineer, it must, if requested by Engineer, be uncovered for Engineer's observation and recovered at Contractor's expense.

B. If Engineer considers it necessary or advisable that covered Work be re-observed by Engineer or inspected or tested by others, Contractor, at Engineer's request, shall uncover, expose, or otherwise make available for observation, inspection, or testing as Engineer may require, that portion of the Work in question, furnishing all necessary labor, material, and equipment.

1. If it is found that the uncovered Work is defective, Contractor shall promptly correct said defects, including all work involved in uncovering and recovering the work, at no cost to the Owner.

2. If, the uncovered Work is not found to be defective, Contractor shall be allowed an increase in the Contract Price or an extension of the Contract Times, or both, directly attributable to such uncovering, exposure, observation, inspection, testing, replacement, and reconstruction.

1.7 CORRECTION OR REMOVAL OF DEFECTIVE OR REJECTED WORK

A. Upon receipt of notice, Contractor shall correct all defective or rejected Work and replace it with Work that is not defective, at no cost to the Owner.

1.8 ACCEPTANCE OF DEFECTIVE WORK

A. If, instead of requiring correction or removal and replacement of defective Work, Owner prefers to accept it, Owner may do so.

1. If any such acceptance occurs, a Change Order will be issued incorporating the necessary revisions in the Contract Documents with respect to the Work, and Owner shall be entitled to an appropriate decrease in the Contract Price, reflecting the diminished value of Work so accepted.

2. Engineer shall determine the reasonableness of the diminished value of Work so accepted and Contractor shall pay all costs involved in making such determination.

END SECTION

SECTION 01 77 00

CONTRACT CLOSEOUT

PART 1 GENERAL

1.1 GENERAL

A. It is the intent of these Contract Documents that the Contractor shall deliver a complete and operable facility capable of performing its intended functions and ready for use.

1.2 CLEANING

A. Throughout the period of construction the Contractor shall keep the Work site free and clean of all rubbish and debris, and shall promptly remove from the site, or from property adjacent to the site of the Work, all unused and rejected materials, surplus earth, concrete, plaster, and debris.

1.3 FINAL SITE CLEAN-UP

A. Upon completion of the Work, and prior to final acceptance, the Contractor shall remove from the vicinity of the Work all paint, surplus material, and equipment belonging to him or used under his direction during construction.

B. The Contractor shall restore to original condition all property not designated for alteration by these Contract Documents.

1.4 FINAL BUILDING CLEAN-UP

A. On all building projects and wherever else applicable, besides general broom cleaning, the following special cleaning shall be performed at completion of the Work:

1. Putty stains and paint shall be removed from glass; glass shall be washed and polished, inside and outside. Care shall be exercised so as not to scratch glass.

2. Marks, stains, fingerprints, and other soil and dirt shall be removed from painted, decorated, or stained work.

3. Waxed woodwork shall be cleaned and polished.

4. Hardware shall be cleaned and polished of all traces; this shall include removal of stains, dust, dirt, paints, and blemishes.

5. Spots, soil, paint, plaster, and concrete shall be removed from tile; tile work shall be washed afterwards.

6. Fixtures and equipment shall be cleaned and stains, paint, dirt, and dust shall be removed.

7. Temporary floor protection shall be removed; floors shall be cleaned, waxed, and buffed.

8. Dust, cobwebs, and traces of insects and dirt shall be removed.

1.5 WASTE DISPOSAL

A. The Contractor shall dispose of surplus materials, waste products, demolition materials, and debris. The Contractor shall transport and dispose of waste materials in accordance with applicable laws and regulations.

1.6 PROJECT RECORD DOCUMENTS

A. The Contractor shall maintain at the site, available to the Owner and Engineer, one copy of the Contract Documents, Drawings, Shop Drawings, Change Orders, and other modifications in good order and annotated to show all changes made during construction. These Documents shall be delivered to the Engineer for the Owner upon completion of the Work.

B. Record documents shall be reviewed during progress meetings to ascertain that all changes have been recorded.

C. Store Record Documents separate from documents used for construction.

1.7 TOUCH-UP AND REPAIR

A. The Contractor shall touch-up or repair finished surfaces on structures, equipment, fixtures, or installations that have been damaged prior to final acceptance. Surfaces on which such touch-up or repair cannot be successfully accomplished shall be completely refinished or in the case of hardware and similar small items, the item shall be replaced. Such items shall include, but not be limited to, the following:

1. Road surfaces

2. Exposed structure surfaces

3. Exposed equipment surfaces

4. Exposed piping surfaces

1.8 EQUIPMENT START-UP

A. After all acceptance tests have been completed by the Contractor and Owner but prior to final acceptance, the Contractor shall recheck all equipment for proper alignment and adjustment, check oil levels, re-lubricate all bearings and wearing points, and in general assure that all equipment is in proper condition for continuous operation.

1.9 OPERATION AND MAINTENANCE (O&M) MANUALS

A. See Section 01 33 00 Operation and Maintenance Manuals.

1.10 FINAL EQUIPMENT CHECK

A. After testing and before acceptance, all equipment shall be test run by the Owner for a minimum of 7 days to ensure proper operation. At the end of the test run each piece of machinery shall be lubricated and all components and couplings checked for proper alignment and adjustment.

B. Submit written certification that Contract Documents have been reviewed, Work has been inspected, and that Work is complete in accordance with Contract Documents and ready for Engineer's inspection.

C. Provide submittals to the Owner required by other governing authorities.

1.11 MANUFACTURER'S CERTIFICATES OF PROPER INSTALLATION

1. The Contractor shall submit manufacturers' certificates of proper installation for all items of equipment.

PART 2 PRODUCTS

(Not Used)

PART 3 EXECUTION

(Not Used)

END SECTION

This Page is Intentionally Left Blank

SECTION 01 81 19

CONSTRUCTION INDOOR AIR QUALITY AND NOISE CONTROL

PART 1 GENERAL

1.1 SUMMARY

A. Section includes:

1. Temporary construction ventilation, dust protection, preconditioning of materials, protection of materials, sequencing, duct protection and noise control to ensure good indoor air quality during and after occupancy and to minimize construction noise.

1.2 REFERENCES

A. SMACNA – IAQ Guidelines for Occupied Buildings Under Construction, 1995, Chapter 3.

B. ASHRAE Standard 52.2-1999 – Method of Testing General Ventilation Air-Cleaning Devices for Removal Efficiency by Particle Size (ANSI approved).

C. CA Green Building Standards Code

1.3 CLASSIFICATION OF RELEVANT MATERIALS

A. VOC-Emitting Materials

1. All VOC Emitting Materials shall meet the limits in California Green Building Standards Code Section 5.504.

1.4 SUBMITTALS

A. Submit a dust and noise control plan. Include temporary construction to ensure occupants are not exposed to dust and excessive noise.

B. Submit eighteen (18) photographs documenting compliance with this Section. Provide six (6) photographs each at three (3) different phases of construction.

C. Contractor shall develop and submit to the Engineer for review the Construction Indoor Air Quality (IAQ) Plan as required in this Section. A template form is provided as Appendix A of this Specification. The plan shall be submitted along with the first submittal for any of the products listed above.

1.5 SUBSTITUTIONS

A. Construction Indoor Air Quality (IAQ) requirements described below are based upon practices described in SMACNA *IAQ Guidelines for Occupied Buildings Under Construction,* 1995. Any modifications to or substitutions of requirements described in this Section must comply with the abovementioned SMACNA guideline.

PART 2 PRODUCTS

NOT USED

PART 3 EXECUTION

3.1 QUALITY ASSURANCE

A. Inspection: Contractor shall conduct inspections to confirm that construction IAQ measures proposed in the Construction IAQ Plan are being followed and be prepared to report compliance with the Plan at progress meetings.

3.2 PROJECT CONDITIONS

A. Air Filtration:

1. Systems designed with particle filters shall not be operated without filters in place. Temporary construction filters shall have a minimum MERV rating of 8.

2. Replace all air filtration media immediately prior to occupancy. Post-construction air filters shall have a minimum MERV rating of 13.

B. Construction Ventilation: Following building enclosure, maintain continuous temporary ventilation of areas during installation of VOC-Emitting Materials identified in paragraph 1.3 of this Section. Construction Ventilation shall be provided for post-occupancy touch-up work involving VOC-Emitting materials. It is not required during Building Flush-Out.

1. Ventilation shall be supplied via open windows and doors, temporary ducts, and temporary fans, sufficient to provide no less than three (3) air changes per hour.

2. When continuous ventilation is not practical via temporary fans and exhaust to outside, then ventilation shall be supplied via the building's HVAC system and shall comply with the following requirements:

a. Provide temporary air filters at return air grilles.

b. Provide 100% outside air. Relative humidity not to exceed 60%.

c. Provide a minimum of three (3) air changes per hour.

3. Maintain continuous ventilation for a minimum period of 72 hours after installation of VOC-Emitting Materials, unless otherwise indicated elsewhere in these Specifications.

4. Ventilate areas directly to outside; ventilation to other enclosed areas is not acceptable.

C. Preconditioning: Prior to installation, allow contractor-furnished contractor-installed VOC-Emitting Furnishings and Equipment as identified in paragraph 1.3 of this Section to off-gas in dry, well-ventilated space for 7 calendar days to allow for reasonable dissipation of odors and emissions.

1. Remove containers and packaging to maximize off-gassing of VOCs.

2. Precondition products in ventilated warehouse or other ventilated building. Preconditioning at the project site is acceptable, provided that Temporary Construction Ventilation and Sequencing measures are taken as described elsewhere in this Specification.

3. Products requiring preconditioning include, at minimum, contractor-furnished and contractor-installed VOC-Emitting Furnishings and Equipment that contain vinyl or other flexible plastics, resins, adhesives, foam rubber, and fiberboards with urea-formaldehyde binders. Products bearing Greenguard certification (www.greenguard.org) shall be excluded from the preconditioning requirement.

D. Noise Control

1. Occupants of the building shall not be exposed to noise levels of 65 dB for more than an hour during any hour of operation of the building.

3.3 SEQUENCING

A. Completion: Complete interior finish material installation prior to Building Flush-Out as described in paragraph 3.6 of this Section.

3.4 PROTECTION

A. Moisture Protection: Protect interior materials from water intrusion or penetration.

B. Duct Protection: during dust-producing activities (e.g. sanding, cutting, or grinding), or when VOC-Emitting Materials (as described in paragraph 1.3 above) are being installed, implement the following measures:

1. If possible, damper off the return (negative pressure) side of HVAC air distribution system and seal return system openings with polyethylene sheet.

2. If HVAC system must be operated during dust-producing activities, provide temporary construction air filters with a minimum MERV rating of 8 at all return air grilles.

3. If HVAC supply air is off, protect diffusers and openings with polyethylene sheet.

3.5 CLEANING

A. Provide the following cleaning

1. If significant dust collection is observed at diffusers, return air grilles, or in ducts clean prior to system start-up.

3.6 BUILDING FLUSH OUT

A. Just prior to Substantial Completion flush out building using the building HVAC system, maintaining a minimum temperature of 60° F and maximum 60% relative humidity as follows:

1. Provide continuous 24 hour ventilation with all air handling unit dampers at their maximum outdoor air position and all supply fans at their maximum position and maximum rate for at least 7 days. This may occur after substantial completion.

2. Following building occupancy, if touch up work involving products with chemical emissions is required, provide temporary construction ventilation during application and following flush out requirements above for a minimum of 4 days after touch up application.

B. Insure that MERV 13 air filters are in place during Building Flush-Out.

C. Installation of furniture and equipment may occur during Building Flush-Out.

D. Return ventilation system to normal operation following Building Flush-Out period to minimize energy consumption.

E. Immediately following Building Flush-Out, replace air filters with new MERV 13 air filters. Air filters that handle solely outside air need not be replaced.

END SECTION

SECTION 26 00 00

ELECTRICAL

PART 1 GENERAL

1.1 SUMMARY

A. Section includes

1. Provide all labor, materials and equipment necessary to complete the installation required for the items specified herein.

2. Contractor shall prepare deferred submittal for approval by the City.

B. Related work under this section

1. Labor and materials required to furnish and install the electrical systems in a complete and operational fashion.

2. Carpentry, masonry, steel and concrete materials and labor required for construction of proper stands, bases and supports for electrical materials and equipment.

3. Cutting and patching of holes required by installation including flashing and counter-flashing of roof and exterior wall penetrations.

4. Repair of damage to the premises resulting from construction activities under this Section to Owner's satisfaction.

5. Removal of work debris from construction activities to Owner's satisfaction.

6. Testing and cleaning of equipment installed.

C. Work not under this section

1. Finish painting of exposed metal surfaces included under Division 9, or as otherwise noted.

1.2 REFERENCES

A. Comply with the latest edition of the following applicable specifications and standards except as otherwise shown or specified:

1. CCR –California Code of Regulations

a. Title 8 –Industrial Relations; Section 1 –Department of Industrial Relations

1) Chapter 3.2 -California Occupational Safety and Health Regulations (CAL/OSHA)

2) Chapter 4 –Section of Industrial Safety

a) Subchapter 4 -Construction Safety Orders (CSO)

b) Subchapter 5 -Electrical Safety Orders (ESO)

b. Title 24 –California Building Standards

1) Part 1 -Building Standards Administrative Code

2) Part 2 -California Building Code (CBC); International Building Code (IBC) with California amendments

3) Part 3 -California Electrical Code(CEC); NFPA 70 National Electrical Code (NEC) with California amendments

4) Part 4 -California Mechanical Code (MEC); IAPMO Uniform Mechanical Code (UMC) with California amendments

5) Part 5 -California Plumbing Code; IAPMO Uniform Plumbing Code (UPC) with California amendments

6) Part 6 -California Energy Code

7) Part 7 -California Elevator Safety Construction Code

8) Part 9 -California Fire Code; International Fire Code (IFC) with California amendments

9) Part 12 -California Reference Standards Code

2. IEEE –Institute of Electrical and Electronic Engineers

a. C2; National Electrical Safety Code (NESC)

3. NECA –National Electrical Contractors Association

a. Standard Practices for Good Workmanship in Electrical Contracting

b. 4090; Manual of Labor Units

4. All applicable local municipal codes and ordinances.

5. Applicable rules and regulations of local utility companies.

1.3 SUBMITTALS

A. Product Data

1. Refer to General and Special Provisions.

B. Deferred Submittal

1. Submit electrical drawings and calculations signed and sealed by a licensed electrical engineer licensed in the State of California.

2. Indicate all dimensions, locations of devices, cabling, and attachments for a complete installation of all electrical and data connections shown on architectural drawings.

1.4 QUALITY ASSURANCE

A. References to codes, standards, specifications and recommendations of technical societies, trade organizations and governmental agencies shall mean that latest edition of such publications adopted and published prior to bid submittal. Such codes or standards shall be considered a part of this Specification as though fully repeated herein.

B. Work and materials shall be in full accordance with the latest rules and regulations of applicable state of local laws or regulations and standards of following:

1. National Fire Protection Association (NFPA)

2. California Electrical Code (CEC)

3. California Occupational Safety Health Act (Cal-OSHA)

4. California State Fire Marshall (CSFM)

5. California Code of Regulations (CCR)

6. Electrical Safety Orders, CAC Title 8 (ESO)

7. California Public Utilities Commissions, General Order 95 (GO-95)

8. Applicable rules and regulations of local utility companies.

9. NECA 1-2006, Standard Practices for Good Workmanship in Electrical Contracting

C. All electrical equipment and material furnished under Division 26 shall conform to all CEC requirements and bear the Underwriters' Laboratories (UL) label where applicable.

D. Nothing in the Contract Documents shall be construed to permit work not conforming to these Codes. Whenever the indicated material, workmanship, arrangement or construction is of higher quality or capacity than that required by the above rules and regulations, the Contract Documents shall take precedence. Should there be any direct conflict between the rules and regulations and Contract Documents, the rules shall govern.

E. All electrical equipment and material furnished under this Division shall conform to NEMA and ASTM standards, CEC and bear the Underwriters' Laboratories (UL) label where such label is applicable.

F. All electrical work shall conform to manufacturer's written instruction, and the NECA Standard Practices for Good Workmanship in Electrical Contracting and all published recommended practices at the time of project. The Contractor shall use

the requirements within the Specifications whenever they exceed NECA guidelines.

G. Follow manufacturer's direction where these direction cover points not included with the Contract Documents.

1.5 DELIVERY, STORAGE AND HANDLING

A. Packing, shipping, handling and unloading

1. Damage to the equipment delivered to the site or in transit to the job shall be the responsibility of the Contractor.

2. Equipment and delivery of material shall be scheduled as required for timely, expeditious progress of work.

B. Storage and protection of job equipment is the responsibility Contractor.

C. Comply with General and Special Provisions requirements with regards to waste management and disposal.

1.6 PROJECT CONDITIONS

A. Discrepancies

1. In the event of discrepancies with the Contract Documents, Engineer shall be notified with sufficient time as stated within General and Special Provisions to allow the issuing of an addendum prior to the bid opening.

B. The architectual plans indicate the general layout and arrangement; the field conditions shall determine exact locations. Field verify all conditions and modify as required to satisfy design intent. Maintain all required working clearances.

C. Fees, permits and utility services

1. Obtain and pay for all permits and service charges required for the installation of this work. Arrange for required inspections and secure approvals from authorities having jurisdiction. Arrange for all utility connections and pay charges incurred including excess service charges if any.

2. Extra charges imposed by the electrical and communication utility companies shall be included in the bid, if available. Unless otherwise stated, these charges will be assumed to include in the bid.

D. Provide and maintain temporary construction power. The General Contractor will pay for electric energy charges.

1.7 SEQUENCING

A. Coordinate work with the Owner.

PART 2 PRODUCTS

2.1 MATERIALS

A. Materials mentioned herein or on Drawings require that the items be provided and of quality noted or an approved equal. All materials shall be new, full weight, standard in all respects and in first-class condition. Insofar as possible, all materials used shall be of the same brand or manufacturer throughout for each class of material or equipment.

B. Materials, where applicable, shall be UL labeled and in accordance with NEMA standards.

C. Dimensions, sizes and capacities shown are a minimum. Do not make changes without written permission of Engineer.

PART 3 EXECUTION

3.1 EXAMINATION

A. Examine Construction Documents and Site; be familiar with types of construction where electrical installation is involved. Note carefully other sections of Specifications with their individual cross-references, standard details, etc.

B. Any electrical work or materials shown either in Construction Documents, but not mentioned herein, or vice versa, shall be executed the same as if mentioned herein, in a workmanlike manner in accordance with all published NECA Standards of Installation.

C. Coordinate work with other crafts to avoid conflicts, and check all outlet locations with drawings and specifications. Make minor adjustments without additional cost to Owner.

D. Engineer will make clarifications and rulings concerning any obvious discrepancies or omissions in work prior and after bidding. Perform all work involved in correcting obvious errors or omissions after award of contract as directed by Engineer at Contractor's expense.

E. Examine site dimensions and locations against Drawings and become informed of all conditions under which work is to be done before submitting proposals. No allowance will be made for extra expense due to error.

F. Layouts of equipment, accessories and wiring systems are diagrammatic (not pictorial), but shall be followed as closely as possible. Construction Documents are for assistance and guidance, and exact locations, distance, levels, etc., will be governed by construction; accept same with this under standing.

3.2 PREPARATION

A. Seal all exterior wall penetrations in an approved watertight manner and to the satisfaction of Engineer and Owner.

B. Channels, joiners, hangers, caps, nuts and bolts and associated parts shall be plated electrolytically with zinc followed immediately thereafter by treating freshly deposited zinc surfaces with chromic acid to obtain a surface which will not form a white deposit on surface for an average of 120 hours when subjected to a standard salt spray cabinet test, or shall be hot dipped galvanized.

3.3 INSTALLATION

A. Forming, cutting and patching

1. In new construction, Contractor shall provide any special forming, recesses, chased, etc., and provide wood blocking, backing and grounds as necessary for the proper installation of electrical work. Be responsible for notifying Contractor that such provision is necessary; layout work and check to see that it suits his requirements.

a. Provide metal backing plates, anchor plates and such that are required for anchorage of electrical work under Division 26; securely weld or bolt to metal framing. Wood blocking or backing will not be permitted in combination with metal framing.

2. Be responsible for proper placement of pipe sleeves, hangers, inserts and supports for this Work.

3.4 REPAIR/RESTORATION

A. Cutting, patching and repairing of existing construction to permit installation of work under Division 26 is the responsibility of Contractor. Repair or replace all damage to existing work in kind to Owner's satisfaction.

B. Obtain Engineer's approval prior to performing any cutting or patching of concrete, masonry, wood or steel structure within building.

3.5 FIELD QUALITY CONTROL

A. Inspection of work

1. Working parts shall be readily accessible for inspection, repair and renewal. The right is reserved to make reasonable changes in equipment location shown on Drawings prior to rough in without additional costs to the Owner.

2. During construction all work will be subject to observation by the Engineer and his representatives. Assist in ascertaining any information that maybe required.

3. Do not allow or cause any work installed hereunder to be covered up or enclosed before it has been inspected and approved. Should any work be enclosed or covered prior to approval, uncover work, and after it has been inspected and approved, restore work of all others to the condition in which it was found at the time of cutting, all without additional costs to Owner.

B. Furnish all testing equipment as maybe required.

C. Test all wiring and connections for continuity and grounds; where such tests indicate faulty insulation or other defects, locate, repair and re-test.

3.6 CLEANING

A. Repair or replace all broken, damaged or otherwise defective parts without additional cost to Owner, and leave entire work in a condition satisfactory to Engineer. At completion, carefully clean and adjust all equipment, fixtures and trim installed as part of this work; leave systems and equipment in satisfactory operating condition.

B. Clean out and remove from the site all surplus materials and debris resulting from this work; this includes surplus excavated materials.

3.7 PROTECTION

A. In performance of work, protect work of other trades as well as work under this Division from damage.

B. Protect electrical equipment, stored and installed, from dust, water or other damage.

END SECTION

This Page is Intentionally Left Blank

Plans

This Page is Intentionally Left Blank

If the sheet is not 30"x42", it is a reduced print. Scale Accordingly.

LOS BANOS CITY HALL

LOS BANOS CITY HALL ADA COUNTERS

520 'J' STREET. LOS BANOS CA. 93635

GENERAL NOTES (SEE SPECIFICATIONS SHEETS FOR ADDITIONAL INFORMATION)

01 11 13 SUMMARY OF WORK

1. ARCHITECTURAL DRAWINGS TAKE PRECEDENCE OVER OTHER DRAWINGS. THE ELECTRICAL, MECHANICAL, AND OTHER DRAWINGS ARE SUPPLEMENTARY TO THE ARCHITECTURAL DRAWINGS. DRAWING DIVISIONS ARE NOT INTENDED TO DIVIDE THE CONSTRUCTION WORK BY TRADE OR CONTRACT. CONTRACTOR WILL COORDINATE ALL WORK WITH THE ARCHITECTURAL DRAWINGS BEFORE PROCEEDING WITH THE WORK. NOTIFY THE ARCHITECT FOR CLARIFICATION OF DISCOVERED DISCREPANCIES. WORK INSTALLED IN CONFLICT WITH THE ARCHITECTURAL DRAWINGS SHALL BE CORRECTED BY THE CONTRACTOR AT NO ADDITIONAL COST TO THE OWNER.
2. THE SPECIFICATIONS ARE AN INTEGRAL PART OF THE CONTRACT DOCUMENTS. FOR SPECIFIC REQUIREMENTS OF MATERIAL, WORKMANSHIP, AND PERFORMANCE, REFER TO SPECIFICATIONS AND GENERAL REQUIREMENTS.
3. ALL DIMENSIONS ARE TO "FACE OF STUD" OR FROM "GRID LINES" IN NEW CONSTRUCTION AND "FACE OF FINISH" IN EXISTING CONDITION, UNO.
4. WRITTEN DIMENSIONS ON DRAWINGS TAKE PRECEDENCE OVER SCALED DIMENSIONS. DO NOT SCALE DRAWINGS TO DETERMINE THE FINAL WORKING DIMENSIONS. DISCREPANCIES SHALL BE REPORTED TO THE ARCHITECT BEFORE PROCEEDING WITH WORK.
5. HEIGHTS ARE DIMENSIONED FROM "ABOVE FINISH FLOOR", UNLESS NOTED OTHERWISE.
6. IN THE EVENT THAT CERTAIN FEATURES OF THE WORK ARE NOT FULLY SHOWN OR DETAILED ON THE DRAWINGS OR CALLED FOR IN THE GENERAL NOTES, THEIR CONSTRUCTION SHALL BE OF THE SAME CHARACTER AS SIMILAR CONDITIONS THAT ARE SHOWN.
7. ITEMS NOT IDENTIFIED AS "EXISTING" ARE INTENDED AS NEW AND TO BE PROVIDED AS PART OF THIS PROJECT. "TYPICAL" SHALL MEAN IDENTICAL FOR ALL SAME CONDITIONS. "SIMILAR" SHALL MEAN COMPARABLE CHARACTERISTICS FOR THE CONDITIONS NOTED

01 31 13 CONTRACTORS MANAGEMENT & COORDINATION

1. THE GENERAL CONTRACTOR WILL BE REQUIRED TO ATTEND ANY PROJECT CONSTRUCTION MEETINGS THAT ARE SCHEDULED THROUGHOUT THE COURSE OF THE PROJECT. HE/SHE WILL PROVIDE AND DISTRIBUTE MEETING NOTES TO ALL PARTIES INVOLVED.
2. CONTRACTOR IS RESPONSIBLE FOR COORDINATING THE CONTRACT DOCUMENTS, FIELD CONDITIONS AND DIMENSIONS, FOR ACCURACY AND CONFIRMING THAT WORK IS CONSTRUCTIBLE AS SHOWN PRIOR TO PROCEEDING WITH THE WORK. FOR QUESTIONS REGARDING THE CONTRACT DOCUMENTS OR OTHER COORDINATION QUESTIONS, OBTAIN WRITTEN CLARIFICATION FROM THE ARCHITECT PRIOR TO PROCEEDING WITH WORK.
3. CONTRACTOR SHALL INFORM THE ARCHITECT OF CONFLICTS THAT EXIST IN LOCATIONS OF MECHANICAL, COMMUNICATION, ELECTRICAL, LIGHTING, PLUMBING, AND FIRE SPRINKLER EQUIPMENT. CONFIRM REQUIRED CLEARANCES FOR INSTALLATION AND MAINTENANCE OF EQUIPMENT IS PROVIDED.
4. CONTRACTOR SHALL BE RESPONSIBLE FOR CUTTING, FITTING, AND PATCHING THAT MAY BE REQUIRED TO COMPLETE THE WORK, OR TO MAKE ITS MANY PARTS FIT TOGETHER PROPERLY. PROTECT ADJACENT CONSTRUCTION FROM DAMAGE. CUTTING AND WEAKENING OF EXISTING STRUCTURAL COMPONENTS, WALLS, FLOORS, AND ROOF MEMBERS IS PROHIBITED UNLESS FULLY DETAILED ON THE PLANS.

01 33 00 SUBMITTALS

1. ALL CHEMICAL OR HAZARDOUS PRODUCTS SHALL HAVE A MATERIAL SAFETY DATA SHEET (MSDS) AND BE LOCATED ON SITE. ALL PRODUCTS MUST BE SUBMITTED TO THE OWNER'S REPRESENTATIVE (ARCHITECT) FOR APPROVAL. APPROVED PRODUCT SPECIFICATION SHEETS CONTRACTOR SHALL CERTIFY THAT NO ASBESTOS CONTAINING MATERIAL (ACM) IS USED ON THE PROJECT.
2. ANY EQUIPMENT ARRIVING ON SITE DAMAGED OR SUBSEQUENTLY DAMAGED ON SITE, SHALL BE REPLACED WITH NEW EQUIPMENT AS DIRECTED BY THE OWNER'S REPRESENTATIVE (ARCHITECT).

01 35 16 ALTERATION PROJECT PROCEDURES

1. EXISTING CONSTRUCTION DATA SHOWN ON THE DRAWINGS WAS OBTAINED FROM AVAILABLE OWNER PROVIDED DRAWINGS. INFORMATION SHOWN ON THE DRAWINGS RELATIVE TO EXISTING CONDITIONS IS PROVIDED AS THE "BEST PRESENT KNOWLEDGE", BUT WITHOUT GUARANTEE OF ACCURACY. DIMENSIONS, ELEVATIONS, AND EXISTING CONDITIONS SHALL BE FIELD VERIFIED ON THE JOB SITE, DISCREPANCIES SHALL BE REPORTED TO THE ARCHITECT BEFORE PROCEEDING WITH WORK.
2. ITEMS IDENTIFIED TO BE DEMOLISHED, REMOVED, OR RELOCATED ARE TO BE COMPLETELY REMOVED. INCLUDING, BUT NOT LIMITED TO CONCEALED ITEMS (PIPES, CURBS, FRAMING, FASTENERS, ETC.). ITEMS WITHIN A DEMOLITION AREA THAT MUST BE REROUTED IN ORDER TO MAINTAIN CONTINUITY SHALL BE DONE SO IN ACCORDANCE WITH THE APPROPRIATE SPECIFICATION SECTIONS, AT NO ADDITIONAL COST TO THE OWNER. CONTINUITY SHALL BE MAINTAINED BY CURRENT STANDARD CONSTRUCTION METHODS, EQUAL TO OR GREATER THAN THE QUALITY OF THE EXISTING CONDITION. ANY AREA OF DEMOLITION SHALL BE LEFT IN A COMPLETE AND CLEAN CONDITION, READY FOR NEW WORK, AS OUTLINED IN THE DOCUMENTS AND DRAWINGS.

01 41 10 REGULATORY REQUIREMENTS

1. CONTRACTOR IS RESPONSIBLE FOR PROVIDING WORK AND MATERIALS IN STRICT COMPLIANCE WITH LOCAL, COUNTY, STATE, AND FEDERAL REGULATORY AGENCIES AND APPLICABLE BUILDING CODES.
2. CONSTRUCTION TECHNIQUES, MATERIALS AND FINISHES TO BE INSTALLED AS REQUIRED BY THE APPROPRIATE CODE AUTHORITIES. INSTALLATION SHALL FOLLOW THE STANDARDS OF THE INDUSTRY IN ADDITION TO MEETING OR EXCEEDING THE DESIGN STANDARDS.
3. THE INTENT OF THE CONSTRUCTION DOCUMENTS IS TO RECONSTRUCT THE CASEWORK IN ACCORDANCE WITH THE 2019 CBC. SHOULD ANY CONDITION DEVELOP NOT COVERED BY THE APPROVED CONSTRUCTION DOCUMENTS, WHEREIN THE FINISHED WORK WILL NOT COMPLY WITH THE 2019 CBC, A CHANGE ORDER DETAILING AND SPECIFYING THE REQUIRED WORK SHALL BE SUBMITTED TO AND APPROVED BY THE REGULATORY AGENCY BEFORE PROCEEDING WITH THE WORK, PER 2019 CBC SECTIONS 107 AND 116.

01 64 00 OWNER FURNISHED ITEMS

1. WORK INDICATED AS "OWNER FURNISHED/CONTRACTOR INSTALLED", AND "OWNER FURNISHED/OWNER INSTALLED" SHALL MEET ALL APPLICABLE CODES AND REGULATORY REQUIREMENTS INDICATED WITHIN THESE DOCUMENTS AND SHALL BE INSTALLED AND FULLY OPERATIONAL PRIOR TO FINAL APPROVAL OF THIS PROJECT.

01 78 36 WARRANTIES

1. ALL WARRANTY DOCUMENTATION AS REQUIRED BY CONTRACT DOCUMENTS SHALL BE TURNED OVER TO THE OWNER BEFORE FINAL PAYMENT.

07 84 00 FIRESTOPPING

1. ALL PENETRATIONS THROUGH FIRE-RATED FLOORS AND WALLS SHALL BE FIRE-STOPPED WITH AN UNDERWRITERS LABORATORY TESTED "THROUGH PENETRATION FIRE-STOP SYSTEM" RATED EQUAL TO OR GREATER THAN THE FIRE RATING OF THE FLOOR OR WALL BEING PENETRATED.
2. THE CONTRACTOR SHALL PROVIDE A COPY OF ALL APPROVED TESTED, LISTED DESIGNS ON THE JOB SITE.

STRUCTURAL NOTES

"WHEN INSTALLING DRILLED IN ANCHORS AND/OR POWDER DRIVING PINS IN EXISTING NO-PRESTRESSED REINFORCED CONCRETE, USE CARE AND CAUTION TO AVOID CUTTING OR DAMAGING THE EXISTING REINFORCEMENT BARS. WHEN INSTALLING THEM INTO EXISTING PRESTRESSED CONCRETE (PRE- OR POST-TENSIONED) LOCATE THE PRESTRESSED TENDONS BY USING A NON-DESTRUCTIVE METHOD PRIOR TO INSTALLATION. EXERCISE EXTREME CARE AND CAUTION TO AVOID CUTTING OR DAMAGING THE TENDONS DURING INSTALLATION. MAINTAIN A MINIMUM CLEARANCE OF ONE INCH BETWEEN THE REINFORCEMENT AND THE DRILLED-IN ANCHOR AND/OR PIN."

CODES

PARTIAL LIST OF APPLICABLE CODES

2019	California Administrative Code (CAC), Part 1, Title 24 C.C.R.
2019	California Building Code (CBC), Part 2, Title 24 C.C.R. (2018 International Building Code Volumes 1-2)
2019	California Electrical Code (CEC), Part 3, Title 24 C.C.R. (2017 National Electrical Code and 2016 California Amendments)
2019	California Mechanical Code (CMC) Part 4, Title 24 C.C.R. (2018 Uniform Mechanical Code)
2019	California Plumbing Code (CPC), Part 5, Title 24 C.C.R. (2018 Uniform Plumbing Code)
2019	California Energy Code (CEC), Part 6, Title 24 C.C.R.
2019	California Historical Building Code (CHBC), Part 8 Title 24, CCR
2019	California Fire Code, Part 9, Title 24 C.C.R. (2015 International Fire Code)
2019	California Existing Building Code (CEBC), Part 10, Title 24 CCR (2018 International Building Code)
2019	California Green Building Standards Code, Part 11, Title 24 C.C.R. (2018 International Building Code)
2019	California Referenced Standards, Part 12, Title 24 C.C.R.
Title 19	C.C.R., Public Safety, State Fire Marshal Regulations.
2013	ASME A17.1 Safety Code For Elevators And Escalators

PARTIAL LIST OF APPLICABLE STANDARDS

ADDITIONAL NFPA APPLICABLE CODES SHALL BE LISTED IN THE PROJECT SPECIFICATION SECTIONS OF THE PROJECT MANUAL.

NFPA 13	Automatic Fire Sprinkler Systems	2016 Ed.
NFPA 14	Standpipe and Hose Systems	2016 Ed.
NFPA 17	Dry Chemical Extinguishing Systems	2017 Ed.
NFPA 17a	Wet Chemical Extinguishing Systems	2017 Ed.
NFPA 20	Stationary Pumps for Fire Protection	2016 Ed.
NFPA 22	Water Tanks for Private Fire Protection	2018 Ed.
NFPA 24	Private Fire Mains & Their Appurtenances	2016 Ed.
NFPA 25	Standard for Inspection, Testing and Maintenance of Water-Based Fire Protection Systems	2013 CA Ed.
NFPA 72	National Fire Alarm & Signaling Code	2016 Ed.
NFPA 80	Fire Doors and Other Opening Protectives	2016 Ed.
NFPA 92	Standard for Smoke Control Systems	2015 Ed.
NFPA 99	Health Care Facilities Code	2018 Ed.
NFPA 253	Critical Radiant Flux of Floor Covering Systems	2015 Ed.
NFPA 2001	Clean Agent Fire Extinguishing Systems	2015 Ed.

FOR A COMPLETE LIST OF APPLICABLE NFPA STANDARDS REFER TO 2019 CBC (SFM) CHAPTER 35 AND CALIFORNIA FIRE CODE CHAPTER 80.

PROJECT DESCRIPTION

THE PROJECT SCOPE CONSISTS OF REPLACING THE REMODELING OF THE EXISTING SERVICE COUNTERS AT THE COMMUNITY DEVELOPMENT AND ADMINISTRATION AND FINANCE. THE NEW COUNTER WILL ALSO HAVE A BULLET RESISTANT GLASS AND BOTH COUNTERS WILL HAVE AN ACCESSIBLE SIDE.

ADD ALTERNATES

1. ACCELERATED SCHEDULE, SEE DIVISION 1 SPECIFICATIONS

DEFERRED APPROVAL

1. ELECTRICAL AND LOW VOLTAGE DOCUMENTS

INDEX

ARCHITECT

HUBER & HUBER Architects

G0.01 COVER SHEET
G0.11 SPECIFICATIONS
G0.12 SPECIFICATIONS
G0.13 SPECIFICATIONS
A1.11 FLOOR PLAN, INTERIOR ELEVATIONS, SITE PLAN AND DETAILS
A2.11 DETAILS

SYMBOLS

NORTH ARROW — OVERLAY ARROW INDICATES TRUE NORTH; SHADED AREA INDICATES PLAN NORTH

ELEVATION CALLOUT (TYPICAL FOR EXTERIOR AND INTERIOR) — SIM: INDICATES A SIMILAR CONDITION; 1 / A101: SHEET WHERE ELEVATION IS DRAWN; LOCATION ON SHEET

SECTION CALLOUT — SIM: INDICATES A SIMILAR CONDITION; 1: LOCATION ON SHEET; AXX.XX.XX: SHEET WHERE SECTION IS DRAWN

DETAIL CALLOUT — SIM: INDICATES A SIMILAR CONDITION; 1: LOCATION ON SHEET; A101: SHEET WHERE SECTION IS DRAWN

CONTROL OR DATUM POINT — FIRST FLOOR: NAME OF ELEVATION (IF APPLICABLE); +0' - 0": ELEVATION ABOVE FINISHED FLOOR

GRID BUBBLE — EXISTING BUILDING GRID SYMBOL; GRID NUMBER; NEW BUILDING GRID SYMBOL

DOOR CALLOUT — A101: DOOR NUMBER

INTERIOR FINISH CALLOUT — A#: MATERIAL FINISH TYPE

WINDOW CALLOUT — AA: WINDOW NUMBER

WALL TYPE CALLOUT — XX: WALL TYPE MARK SEE A10.10

KEYNOTE — ?: DEMO KEYNOTE NUMBER (SEE LEGEND ON SHEET); ?: NEW WORK KEYNOTE NUMBER (SEE LEGEND ON SHEET)

ROOM EXITING INFORMATION — ROOM NAME 101, 150 SF, OL, OLF, # Exit:
- ROOM NAME
- ROOM NUMBER
- AREA (SQ FT)
- OCCUPANT LOAD FACTOR (REFER TO TABLE 1004.1.1)
- OCCUPANT LOAD (AREA DIVIDED BY LOAD FACTOR)
- NUMBER OF EXITS REQUIRED (REFER TO TABLE 1015.1)

WIC CASEWORK TAG — WI999, U, WD, HT, DP:
- MANUFACTURER REFERNCE AND MODEL NUMBER
- MODIFICATION NOTE
- CABINET DEPTH
- CABINET HEIGHT
- CABINET WIDTH

DISCIPLINE		SHEET TYPE	
G	GENERAL	0	CODE ANALYSIS, NOTES
C	CIVIL	1	SITE PLAN
L	LANDSCAPE	2	FLOOR PLAN
A	ARCHITECTURE	3	CEILING PLAN
I	INTERIORS	4	ROOF PLAN
Q	EQUIPMENT	5	EXTERIOR ELEVATIONS
S	STRUCTURAL		
P	PLUMBING	6	SECTIONS
M	MECHANICAL	7	ELENGARED PLANS
E	ELECTRICAL	8	INTERIOR ELEVATIONS
FA	FIRE ALARM	9	SCHEDULES
T	TELECOM	10	DETAILS
AV	AV EQUIPMENT		
K	KITCHEN		
FP	FIRE PROTECTION		

BUILDING LETTER/SEGMENT (USER DEFINED)

USED ONLY IF REQUIRED. IF NOT, COLUMN IS OMITTED.

A A 1 . 1 1 A . A — SHEET TYPE; BUILDING LETTER (IF APPLICABLE); DISIPLINE; USER DEFINED (IF APPLICABLE); FLOOR LEVEL; SERIES / ORDER; SEGMENT (IF APPLICABLE)

ABBREVIATIONS

&	AND
@	AT
∠	ANGLE
AB	ANCHOR BOLT
A/C	AIR CONDITIONING
AC	ASPHALTIC CONCRETE
ACT	ACOUSTICAL or ACOUSTIC
ADMIN	ADMINISTRATION
AFF	ABOVE FINISHED FLOOR
ALT	ALTERNATE
ALUM	ALUMINUM
ANSI	AMERICAN NATIONAL STANDARDS INST.
APPROX	APPROXIMATE
ARCH	ARCHITECTURAL
AV	AUDIO / VISUAL
BLDG	BUILDING
BLKG	BLOCKING
C	CHANNEL
CAB	CABINET
CBC	CALIFORNIA BUILDING CODE
CANT	CANTILEVER
CEM	CEMENT
CER	CERAMIC
CF	CUBIC FOOT or FEET
CFOI	CONTRACTOR FURNISHED/OWNER INSTALLED
CG	CORNER GUARD
CHKD	CHECKED
CI	CAST IRON
CJ	CONTROL JOINT
℄	CENTER LINE
CLG	CEILING
CLR	CLEAR
CONC	CONCRETE
CONF	CONFERENCE
COORD	COORDINATE or COORDINATOR
CORR	CORRIDOR
DEMO	DEMOLISH or DEMOLITION
DEPT	DEPARTMENT
DF	DRINKING FOUNTAIN
DIA OR Ø	DIAMETER
DIM	DIMENSION
DIR	DIRECTOR or DIRECTORY
DN	DOWN
DWG	DRAWING
(E)	EXISTING
EA	EACH
ELEC	ELECTRICAL
ELEV	ELEVATION
EQUIP	EQUIPMENT
'	FOOT or FEET
FE	FIRE EXTINGUISHER
FEC	FIRE EXTINGUISHER & CABINET
FLR	FLOOR or FLOORING
FO	FACE OF
FOC	FACE OF CONCRETE
FOF	FACE OF FINISH
FOS	FACE OF STUD
FR	FIRE RATED
GYP BD	GYPSUM BOARD
HM	HOLLOW METAL
ID	INSIDE DIAMETER
" OR IN	INCH or INCHES
ICC	INTERNATIONAL CODE COUNSEL
JACHO	JOINT COMMISION ACCREDITATION HEALTH CARE ORGANIZATION
JAN	JANITORIAL
KIT	KITCHEN
LAV	LAVATORY
L.L.	LEAD LINED
MAX	MAXIMUM
MECH	MECHANICAL
MIN	MINIMUM
MISC	MISCELLANEOUS
MTD	MOUNTED
MTL	METAL
N/A	NOT APPLICABLE
NIC	NOT IN CONTRACT
NTS	NOT TO SCALE
d	PENNY (nail size)
±	PLUS OR MINUS
#	POUND
OSHPD	OFFICE OF STATEWIDE HEALTH PLANNING & DEVELOPMENT
OD	OUTSIDE DIAMETER
PERP	PERPENDICULAR
PLAM	PLASTIC LAMINATE
PLUMB	PLUMBING
PLYWD	PLYWOOD
PNL	PANEL
PREP	PREPARATION or PREPARE
R	RADIUS (IN DIMENSIONS)
RAD	RADIUS (IN NOTES)
RECEPT	RECEPTIONIST
REFR	REFRIGERATOR
SCHED	SCHEDULE
SF	SQUARE FOOT OR FEET
SIM	SIMILAR
SMS	SHEET METAL SCREWS
SST	STAINLESS STEEL
STL	STEEL
STOR	STORAGE
STRUCT	STRUCTURAL
SUSP	SUSPENDED
TOC	TOP OF CONCRETE
TOD	TOP OF DRAIN
TOF	TOP OF FRAMING
	TOP OF FOOTING
TOP	TOP OF PARAPET
TOPL	TOP OF PLATE
TOR	TOP OF ROOF OR RIDGE
TOS	TOP OF SLAB
TOW	TOP OF WALL
TST	TOP OF STEEL
UNO	UNLESS NOTED OTHERWISE
VFVI	VENDOR FURNISHED/VENDOR INSTALLED
VIF	VERIFY IN FIELD
WD	WOOD
WH	WATER HEATER
WS	WOOD SCREW
OFOI	OWNER FURNISHED/OWNER INSTALLED

NOTE:
OTHER ABBREVIATIONS USED ON THESE DRAWINGS ARE CONSIDERED STANDARDS IN THE BUILDING INDUSTRY. CONTACT ARCHITECT FOR NECESSARY CLARIFICATION.

SPECIAL INSPECTIONS

REQUIRED VERIFICATION AND INSPECTION OF COLD-FORMED STEEL LIGHT FRAME CONSTRUCTION				
VERIFICATION AND INSPECTION	CONTINUOUS	PERIODIC	COMMENTS	REFERENCES
1. WELDING, SCREW ATTACHMENT, BOLTING, ANCHORING AND OTHER FASTENING OF COMPONENTS WITHIN THE LATERAL FORCE RESISTING SYSTEM, INCLUDING SHEAR WALLS, BRACES, DIAPHRAMS, COLLECTORS (DRAG STRUTS) AND HOLD-DOWNS		X	SPECIAL INSPECTION NOT REQUIRED IF EITHER OF THE FOLLOWING APPLY, 1) THE SHEATHING IS GYPSUM BOARD OR FIBERBOARD 2) THE SHEATHING IS WOOD STRUCTURAL PANEL OR STEEL SHEETS ON ONLY ONE SIDE OF THE SHEAR WALL OR DIAPHRAM ASSEMBLY AND THE FASTENER SPACING OF THE SHEATHING IS MORE THAN 4 IN. ON CENTER	CBC 1705.10.2 1705.11.3
2. ERECTION AND FASTENING OF EXTERIOR CLADDING, INTERIOR AND EXTERIOR NONBEARING WALLS AND INTERIOR AND EXTERIOR VENEER		X	SEE CBC FOR EXCEPTIONS	CBC 1705.11.5
3. POST INSTALLED EXPANSION ANCHORS		X	10% OF ANCHORS SHALL BE TESTED	CBC 1901.3

SPECIAL INSPECTION NOTES

1. STRUCTURAL OBSERVATION SHALL BE PROVIDED BY THE DESIGN ENGINEER(S) OF RECORD OR THEIR AUTHORIZED REPRESENTATIVES IN ACCORDANCE WITH CBC 2019, SECTION 1704. ALL RISK CATEGORY III AND IV STRUCTURES SHALL HAVE STRUCTURAL OBSERVATION. STRUCTURAL OBSERVATION SHALL CONSIST OF SITE VISITS AT INTERVALS APPROPRIATE TO THE STAGE OF CONSTRUCTION TO OBSERVE CONSTRUCTION IN PROGRESS AND REVIEW OF TESTING AND INSPECTION REPORTS FOR GENERAL COMPLIANCE WITH THE CONSTRUCTION DOCUMENTS RELATING TO THE STRUCTURAL WORK AND THE NONSTRUCTURAL COMPONENTS AND EQUIPMENT ANCHORAGE.
2. SPECIAL INSPECTION IN ACCORDANCE WITH CBC 2019 SECTIONS 1704 & 1705, SHALL BE REQUIRED AS INDICATED IN THE SPECIAL INSPECTION AND TESTING SCHEDULE ON THIS SHEET.
3. ALL SPECIAL INSPECTIONS REQUIRED MUST BE BY APPROVED INDEPENDENT INSPECTORS WHO SHALL BE RETAINED BY THE OWNER. INSPECTORS SHALL SUBMIT THEIR REPORTS DIRECTLY TO THE BUILDING OFFICIAL AND THE REGISTERED DESIGN PROFESSIONAL IN RESPONSIBLE CHARGE. THESE INSPECTORS ARE IN ADDITION TO ANY REQUIRED [AGENCY] INSPECTIONS. CONTRACTOR SHALL COORDINATE INSPECTIONS AND ALLOW ACCESS FOR THE SPECIAL INSPECTOR TO PERFORM REQUIRED INSPECTIONS.

BUILDING ANALYSIS

PROJECT ADDRESS:	520 'J' STREET LOS BANOS, CA 93635
COUNTY:	MERCED
APN:	025-241-014-000
OCCUPANCY:	GROUP A-3 & B-2
TYPE OF CONSTRUCTION:	TYPE VB - NOT SPRINKLERED
HEIGHT:	±25'-0" (SINGLE STORY)
BUILDING AREA:	9,683 S.F. (EXISTING)
PROJECT AREA:	4,270 SF

VICINITY MAP

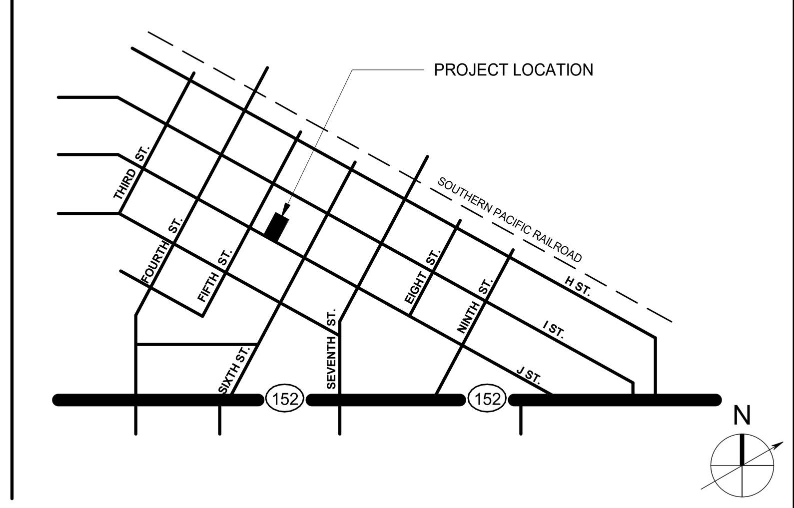

City of Los Banos
At the Crossroads of California
520 'J' Street
Los Banos, California 93635

HUBER & HUBER Architects
10796 N. TEA PARTY LN
FRESNO, CA 93730-5920
ANN HUBER: 559.470.7721
KEITH HUBER: 559.304.3015

LICENSED ARCHITECT ANN BENNETT HUBER C24520 REN. 03-31-21 STATE OF CALIFORNIA

Project Number: 1001006

ISSUE:

No.	Issued	Date	No.	Issued	Date

PROJECT TEAM

OWNER
City of Los Banos
520 'J' STREET, LOS BANOS, CA 93635
PHONE (209) 827-7000

ARCHITECT
HUBER & HUBER Architects
10796 N. TEA PARTY LN. / FRESNO, CA 93730-5920
T (559) 470-7721 / WWW.ASH-ARCHITECTS.COM

STRUCTURAL
Provost & Pritchard
286 W. CROMWELL AVE / FRESNO, CA 93711
PHONE (559)449-2700

Agency Approval:

Client & Project Address:
LOS BANOS CITY HALL
LOS BANOS CITY HALL
520 'J' ST.
LOS BANOS, CA 93635

Project:
LOS BANOS CITY HALL ADA COUNTERS

Sheet Title:
COVER SHEET

CONSTRUCTION DOCUMENTS

Fac No: | Bldg No: N/A
Date: 10/6/2020 | Client Project No: N/A

Sheet:

G0.01

Please Recycle

SECTION 02 41 19 - SELECTIVE DEMOLITION

A. SECTION INCLUDES
1. Remove designated building equipment, fixtures, components and utilities to permit installation of new construction.
2. Include Work required to demolish and remove elements of existing construction including flooring, walls and similar elements of existing building construction.

B. EXISTING CONDITIONS
1. Before beginning Work, investigate and verify existence and location of mechanical, drainage, and electrical systems and other construction affecting Work.
2. Locate invert elevation at points of connection to existing sanitary - and storm drain, water-service piping, and underground electrical services.
3. Employ a utility service locator company to locate underground utilities.
4. Verify Owner's Record Drawings.

C. PREPARATION
1. Disconnect, remove and cap designated utility services within demolition areas. Notify Owner 48 hours in advance of any utility shut-down.
2. Prior to commencement of demolition operations, notify Underground Service Alert.
3. Protection: Protect existing items that are not indicated to be altered.

D. EXECUTION
1. Demolish in orderly and careful manner. Maintain protected egress and access at all times.
2. Except where noted otherwise, immediately remove demolished materials from site and dispose legally. Do not utilize Owner's disposal system.
3. Remove materials to be re-installed or retained in manner to prevent damage. Store and protect until re-installation.
4. Upon completion of Work, leave areas of Work in clean condition.
5. New and existing Work that is cut into, altered, damaged, relocated or reinstalled shall be restored to original conditions. Workmanship and materials to conform to applicable provisions of other applicable Sections of Specifications.
6. Remove existing floor covering materials in areas indicated.
7. Sandblast concrete floor surfaces to remove remaining adhesive, mortar, paint and similar materials which will affect bond of new floor coverings. International Concrete Repair Institute, ICRI Concrete Surface Profile CSP #3.
8. Patch voids with non-shrink grout.
9. Grind high spots and fill low spots to provide an even surfaced substrate for specified new floor covering materials. Leveling materials shall be compatible with mortars and adhesives required to install finish floors. Floors shall not vary more than 1/4 inch in 10 feet as determined with straightedge.
10. Resilient tile (VCT), ceramic tile, quarry tile, or similar materials: Remove to joint line without leaving damaged or defective units where joining new construction. After flooring removal, clean substrates to remove setting materials and adhesives.
11. Wall Removal: Remove tiles, setting materials, bonding or adhesive, metal lath, board materials to joint line or support line on stud. Verify stud to receive new construction.
12. Concrete repair: Edges of existing concrete shall be kept damp for 24 hours and scrubbed with Neat Portland Cement grout just before new concrete is placed. In lieu thereof, an approved epoxy concrete adhesive may be used. Finish shall match existing adjoining Work. Minimum 2,500 psi concrete for patching slabs on grade.
Plaster repair: Dampen edges of existing plaster. Plaster patching shall be of type, thickness and finish to match existing Work.
13. At Removed Flooring Materials: trowel with patching compound, cement based at all areas, leave level, smooth ready to receive new flooring finish materials. At contractor's option install cement-base self-leveling underlayment at no cost to the Owner.
14. At removed casework and equipment: repair and patch surfaces with like materials and to match adjacent surfaces. Leave surfaces in acceptable condition as determined by the Architect to received new finishes.
15. Painting: Areas to be repainted or patched shall be prepared and finished as specified in Section 09 90 00, Painting. Where painting of existing surfaces is scheduled, paint manufacturer's standard specification for interior or exterior maintenance painting may be utilized, when approved by Architect for each surface application.
16. Holes required through existing stud wall, concrete or masonry construction to accommodate new electrical conduits and piping and ductwork shall be provided as specified in Division 22. Plumbing; Division 23, Heating Ventilation and Air Conditioning; and Division 26, Electrical.
17. Work shall be fully coordinated to ensure proper sequence, limits, methods and time of performance. Arrange Work so as to impose a minimum of hardship on present operation of facilities.
18. Remove such existing ceilings, floors, walls, finish materials or equipment as required to complete Work. Restore such surfaces to their original condition after Work is completed.
19. Provide adequate ventilation during all operations to prevent accumulation of dust, fumes, vapors or gases.
20. Miscellaneous Removal Items: Items not specifically mentioned shall be removed as indicated on drawings. Items not specifically mentioned shall be repaired, patched or finished like new Work or to match existing adjoining surfaces as approved.
21. Salvage: Offer Owner first right of refusal for removed materials that may have residual value. Remove items designated by the Owner to be salvaged with care. Clean, wrap or crate for storage and handling, and deliver to Owner as directed.

END OF SECTION

SECTION 03 15 14 - DRILLED ANCHORS

PART 1 - GENERAL
1.01 WORK INCLUDES
A. Expansion and Adhesive Anchors in Concrete, and Concrete Masonry Units and related items.
1.02 SUBMITTALS
A. Submit the following:
1. Product Data.
a. Manufacturer's product data for all expansion and adhesive anchors.
1) Submit current ICC Evaluation Services research or evaluation reports evidencing maximum allowable shear and withdrawal load data.
2. Quality Assurance / Control Submittals:
a. Test Reports: Submit copy to AOR, Project Inspector and Contractor.
1) Tension Testing as required.
1.03 QUALITY ASSURANCE
A. Single Source Responsibility:
1. Obtain drilled anchors from a single manufacturer.
2. Obtain adhesive for anchorage from a single manufacturer.
B. Manufacturer's Qualifications: Provide drilled and adhesive anchors from a manufacturer with Materials ICC approved and accepted by Agency.
C. In accordance with the following:
1. ICC International Code Council
2. IR Interpretation of Regulations
D. Job Testing: An independent laboratory, in presence of Project Inspector, to perform proof of load test of drilled anchors acting in tension or shear, to verify satisfactory installation to the enforcement agency,
1. When drilled-in expansion-type anchors or other post-installed anchors acceptable to the enforcement agency are used in lieu of cast-in-place bolts, the allowable shear and tension values and installation verification test loads shall be acceptable to the enforcment agency.
1.04 DELIVERY, STORAGE AND HANDLING
A. Deliver products in original, unopened packages with manufacturer's labels identifying products legible and intact.
B. Store materials inside, undercover and in a manner to keep them dry, protected from the weather, surface contamination, corrosion, damage from construction traffic and other causes.
1.05 WARRANTY
A. Contractor's General Warranty:
1. Inaccordance with Specification Section - EXECUTION REQUIREMENTS.
B. Manufacturer's Warranty:
1. In accordance with manufactuer's written standard warranty:
a. Warranty Period
C. Installer's Warranty:
1. In accordance with the terms of the Specification Section - Warranties, but the period of time shall be for One (1) Year.
.

PART 2 - PRODUCTS
A. Products specified are from companies listed below or approved equivalent.
1. Manufacturer:
a. Expansion Anchor:
1) HILTI INC.
2) Acceptable Alternative Manufacturers:
a) WEJ-IT, b) ITW RAMSET/RED HEAD, c) SIMPSON STRONG-TIE
b. Adhesive Anchors:
1) HILTI INC.
2) Acceptable Alternative Manufacturers:
a) WEJ-IT, b) ITW RAMSET/RED HEAD, C) SIMPSON STRONG-TIE
B. Products from other manufacturer's not listed must submit in accordance with Specification Section - SUBSTITUTION PROCEDURES.
2.02 MATERIALS
A. Manufacturer's Standard Drilled Anchors (expansion or adhesive) unless noted otherwise.
1. Metal Finishes
a. Zinc Plated Carbon Steel
b. Stainless Steel
B. Expansion Anchors:
1. Wedge Anchors: The Wedge category features a small split expansion ring installed on a tapered (integral cone) part of the stud at the bottom. As the nut is tightened, withdrawing the stud portion from the hole, the expansion ring engages the concrete and is further expanded on the tapered part of the stud.
2. Sleeve Anchors: The Sleeve category is similar to the wedge except a large expansion sleeve is used instead of a small expansion ring. The outside of the sleeve defines the anchor diameter with the threaded stud being of a smaller diameter since it fits inside the sleeve. The stud has an integral cone expander at the bottom similar to the wedge category. The expansion mechanism is similar to the wedge category except the top of the sleeve is normally in contact with the nut/washer and is initially forced down over the cone expander as the anchore is tightened. As the sleeve is expanded, it engages the concrete and continues to expand as the wedge anchor.
3. Shell Anchors: The Shell category has the most variations, but all use a tapered cone expander, either internal or external, to expand the shell of the anchor against the hole. The anchor is either hammered down over an external expander or a special tool is used to drive an internal expander further ito the anchor.
C. Adhesive Anchors which chemically bonds Steel Rods or Deformeed Steel Reinforcement Dowels to concrete or masonry elements:
1. Theaded Steel Rods with minimum yield strength of ksi and complying with ASTM A36 - Specifications for Carbon Structural Steel, or ASTM A193 - Specifications for Alloy-Steel and Stainless Steel Building Materials for High Temperature or High Pressure Service and Other Special Purpose Applications, Grade B7.
2. Deformed Steel Reinforcement Dowels shall be a minmum of Grade 60 and comply with ASTM A615-Specifications for Deformed and Plain Carbon-Steel Bars for Concrete Reinforcement or ASTM A706 - Specificaitons for Low-Alloy Steel Deformed and Plain Bars for Concrete Reinforcements.
3. Adhesives, consisting of two primary components that are stored separately, and having a mixing nozzle provided by the manufacturer combining the components prior to placing in the holes.
4. Long term durability and stability of the adhesive anchor material and its resistance to loss of strength and chemical change at elevated temperatures shall be established to the satisfaction of the enforcement agency.

PART 3 - EXECUTION
3.01 PREPARATION
A. For items to be embedded into Concrete or Concrete Masonry Unit construction provide installation instructions.
1. Installation instruction to be available on the project site.
3.02 INSTALLATION
A. Fastening to In-Place Construction: Provide anchorage devices where necessary for securing designated items indicated on the drawings, or as necessary for a complete and proper job to in-place construction.
1. Install the anchors in accordance with the requirements given in the ICC Evaluations Services Report recommendations for the specific anchor used.
2. When installing expansion anchors through metal deck into concrete, the anchors to be installed in the center of the low flute of the decking where practicble in minimum 20 gage deck.
a. The minimum depth of embedment shall be 1-1/2 inches above the top flute of the decking (except 1/4 and 5/16 inch diameter anchors for ceilings) when the slab thickness above the top of the flute is at least 3 inches.
b. Do not use Shell type anchors on the underside of concrete and metal deck construction due to damage caused to the concrete when hammering in the shell anchors.
3. Install Adhesive Anchors by placing adhesive into specially prepared holes, then insert rods or dowels into holes in a manner that disperses the adhesive to assure maximum contact between adhesive, surface of the holes and surface of the anchor.
a. Adhesive anchors shall not be used in overhead applications.
B. Cutting, Fitting, and Placement: Perform cutting, drilling and fitting required for designated items of construction. Set work accurately in location, alignment and elevation, level true and free of rack, measured from established lines and levels.
1. The minimum edge distance and spacing of wedge and adhesive anchors shall not be less than ten (10) diameters or as required by ICC Evaluation Service Report unless specifically shown on drawings.
C. In Reinforced Concrete or Concrete Masonry Construction, use care and caution to avoid cutting or damaging reinforcing bars.
D. Do not install expansion or adhesive anchors in recently placed concrete which has not had a minumum 28 day curing period and which has not been accepted as having a minimum compressive strength of 3000 psi.
3.03 FIELD QUALITY CONTROL
A. Testing, General
1. Perform testing in accordance with ACI 318 - Building Code Requirements for Structual Concrete and Commentary, and herein specified.
a. When expansion or adhesive anchors are listed for sill plate bolting applications, 10 percent of the anchors shall be tension tested.
b. When expansion or adhesive anchors are used for other structural application, all such anchors shall be tension tested.
1) Expansion-type anchors shall not be used as hold-down bolts.
c. When expansion or adhesive anchors are used for non-structural application such as equipment anchorage, 50 percent or alternate bolts in a group shall be tension tested, except that if the design load is less that 75 pounds, only one anchor in ten need be tested. See drawings for items weighing 75 pounds or less.
1) The tension testing of the anchors shall be done in the presence of the Project Inspector and a report of the test results shall be submitted to the enforcement angency OSHPD.
2. When expansion anchors are used for ceiling hanger wires, 1 out of 10 must be field tested for 200 pounds of tension per IR 25-2.
a. When expansion anchors are used for ceiling bracing wires, 1 out of 2 must be field tested for 440 pounds in tension.
b. Test ceiling anchors with wires attached.
3. The proof load may be applied by any method that will effectively measure the tension in the anchor, such as a direct pull with a hydraulic jack calibrated spring-loading devices, etc.
4. If any anchor fails testing, test all anchors of the same category not previously tested until twenty (20) consecutive pass, then resume the initial testing frequency.
a. The cost of any additional testing as a result of failures shall be the responsibility of the Contractor.
5. When a drilled-in adhesive anchor is used in lieu of a required cast-in-place bolt, cost of testing shall be the responsibility of the Contractor at no additional cost to the Owner.
B. Testing
1. Expansion Anchors:
a. Anchor diameter refers to the thread size for the Wedge and Shell categories, and to the anchor outside diameter for the Sleeve category and Adhesive anchors.
b. Apply proof test loads to Wedge and Sleeve anchors without removing the nut if possible. If not. remove nut and install a threaded coupler to the same tightness of the original nut using a torque wrench and apply load.
c. For Sleeve/Shell internally threaded categories, verify that the anchor is not prevented from withdrawing by a baseplate or other fixtures. If restraint is found, lossen and shim or remove fixture(s) prior to testing.
d. Reaction loads from test fixtures may be applied close to the anchor being tested, provided the anchor is not restrained from withdrawing by the fixture(s).
e. Sheel type anchors shall be tested as follows:
1) Visually inspect 25 percent for full expansion as evidenced by the location of the expansion plug in the anchor body.
a. Plug location of a fully expanded anchor shall be as recommended by the manufacturer, or, in the absence of such compensation, as determined on the job site following the manufactuere's written installation instructions.
b. At least 5 percent of the anchors shall be proof loaded as indicated in the Test Values schedule on the drawings, but not less than three anchors per day for each different person or crew installing anchors. or;
2) Test installed anchors per ACI 318 - Building Code Requirements for Structural Concrete and Commentary.
2. Adhesive Anchors:
a. Adhesive anchors shall be tension tested. The tension test load shall equal twice the allowable load for the specific location of the anchor to be tested (Ii.e. accounting for edge distance) or 80 percent of the yield strength of the bolt (0.8 AbFy), whichever is less.
1) The test procedure for expansion-type anchors in the test values table shall also be used for the adhesive anchors.
b. Where adhesive anchors are used as shear dowels across cold joint in slabs-on-grade and the slab is not part of the structural system, testing of those dowels is not required.
c. Anchors shall exhibit nodiscernable movement during the tension test.
3. Test equipment (including torque wrenches) is to be calibrated by an approved testing laboratory in accordance with standard recognized procedures.
a. Alternate torque test procedures and test values for Shell type anchors may be submitted to the enforcement agency for review and approval on a case by case basis when test procedures are submitted and approved by the enforcement agency.
4. The following criteria apply for the acceptance of installed anchors:
a. Hydraulic Method: The anchor should have no observable movement at the applicable test load. For wedge and sleeve type anchors, a practical way to determine observable movement is that the washer under the nut becomes loose.
b. Tourque Wrench Method: The applicable test torque must be reached within the following limits:
1) Wedge or Sleeve Type: One-half (1/2) turn of the nut.
a) One-quarter (1/4) turn of the nut for the 3/8 inch sleeve anchor only.
2) Torque testing of adhesive anchors is not permitted.

SECTION 03 15 14 - DRILLED ANCHORS Continued

5. If the manufacturer's recommended installation torque is less than the test torque note in the table, the manufacturer's recommended installation torque shall be used in lieu of the tabulated balues.
6. Testing should occur 24 hours minimum after installation of the subject anchors.
7. Required Maximum Test Values for Concrete, or Concrete Masonry Units in tension for the ranges and sizes of Drilled Anchors are shown on the drawings.
a. If no values are given, then refer to IR 19-1 Tabulated Values in the Table titled "TEST VALUES Hardrock or Lightweight Concrete".

END OF SECTION

SECTION 05 40 00 - COLD FORMED METAL FRAMING

PART 1 - GENERAL
1.01 SECTION INCLUDES
A. Load-bearing cold-formed structural steel studs.
B. Interior wall framing using Cold Formed Metal Framing at plumbing walls, wall openings and cabinet-supporting walls.
C. Formed steel accessories.
D. Related Sections
E. Section 06 41 00, Casework.
F. Section 07 21 00, Insulation.
G. Section 07 92 00, Joint Sealers.
H. Section 08 41 13, Aluminum Entrances and Storefronts
I. Section 09 29 00, Gypsum Board
J. Section 13 10 10, Bullet Resistant Partitions and Equipment
1.02 REFERENCES
A. AISI – American Iron and Steel Institute
B. S100 – Design of Cold-Formed Steel Structural Members.
C. S200 – Cold-Formed Steel Framing – General Provisions.
D. ASTM International
E. A 1003 – Steel Sheet, Carbon, Metallic- and Nonmetallic-Coated.
F. C 645 – Nonstructural Steel Framing Members.
G. A653/A653M - Steel Sheet, Zinc-Coated (galvanized) or Zinc-Iron Alloy - Coated (Galvannealed) by the Hot-Dip Process.
H. C 754 – Installation of Steel Framing Members.
I. C955 - Load-Bearing Steel Studs, Runners, and Bracing or Bridging for Screw Application of Gypsum Panel Products and Metal Plaster Bases.
J. C 1513 – Steel Tapping Screws for Cold-Formed Steel Framing Connections.
K. AWS D1.3 – American Welding Society, Structural Welding Code, Sheet Steel.
L. CBC California Building Code 2019, Chapter 22
1.03 SUBMITTALS
A. Provide product data on standard framing members. Describe materials and finish, product criteria, limitations and properties.
B. Mill certificates: signed by the steel sheet producer indicating steel sheet complies with requirements.
1.04 QUALITY ASSURANCE
A. Manufacturer: Company specializing in steel studs framing and components with five years minimum experience.
B. Welding: Welding of cold formed metal is not allowed.
PART 2 - PRODUCTS
2.01 FRAMING MATERIALS
A. Studs: ASTM A653, Structural Grade 33, sheet steel. Studs shall be rolled from new sheet steel and shall not be produced from re-rolled steel. When used as joists, webs shall be unpunched
B. Properties: As listed in Steel Stud Manufacturers Association (SSMA) tables for applicable grade of steel and sizes.
C. Conform to AISI S100 and AISI S200.
D. Coating: Zinc coated per ASTM A653, G60.
B. Track: ASTM A653, Structural Grade 33, sheet steel, channel shaped, thick unless noted otherwise on drawings. Solid web, profile to produce snug fit over adjacent components.
1. Conform to S100 – Design of Cold-Formed Steel Structural Members.
2. Approved pre-fabricated slotted slip track for top of wall at framing: CEMCO Slotted Track (CST) 16 gauge, ICC ESR-2012 or equal as approved in accordance with Division 01, General Requirements for substitutions.
3. Provide stand-off washers for fasteners.
4. Install in accordance with manufacturer's recommendations and fire rating requirements.
5. Coating: Zinc coated per ASTM A653, G60 [prime painted].
6. Header and Jambs: Use stud and track sections as detailed on Drawings.
2.02 ACCESSORIES
A. Fastening: Self-drilling, Self-tapping Screws, ASTM C954, galvanized, Buildex/Tomarco Type S-12 point, low profile head screws size as detailed, 1/2 inch long for two layers 16 gauge metal for non load-bearing framing.
B. Anchorage Devices, Powder Actuated:
C. Install to conform to the load requirements of this Section and Tables 1, 2, 3 and 4 of ICC-ESR 1663 Hilti. Minimum diameter: 0.145" diameter.
1. Utilize tools as recommended by the manufacture in compliance with ICC numbers.
2. ICC-ESR 1663 Hilti Inc., Fasteners – Manual, Pneumatic, or Powder- Driven Steel Studs and Nails
A. Allowable Loads: Limited 100 lbs. Maximum or 80% of ICC approved values. Testing required, refer to Division 01.
B. Use of Powder actuated fasteners for tension loads is limited to support of minor loads such as suspended acoustical ceilings, ductwork and conduit. Permissible Loads for Ceiling Clip Assembly:
1. Normal-Weight Concrete: Ceiling Clip Assembly, minimum 0.177 inch diameter, minimum penetration 1-1/2 inch. Required Allowable Loads: 100 lbs. or 80 percent of values listed in ICC Report whichever is less: ICC ES-2184.
a. Type CC27ALH42 w/DX KWIK, by Hilti, Inc., Tulsa, OK.
1. Lightweight Concrete: Ceiling Clip Assembly, minimum 0.177 inch diameter, minimum penetration 1-1/4 inch. Required Allowable Loads: 100 lbs. or 80 percent of values listed in ICC ES-2184:
a. Type CC27ALH32, by Hilti, Inc., Tulsa, OK.
A. Anchorage Devices, Drilled Expansion Anchors:
B. Wedge Type: KWIK Bolt TZ Concrete Anchor, 3/8 to 3/4 inch diameter as noted, ICC ESR-1917, by Hilti Inc., Tulsa, OK.
1. Eyebolt HHDCA drill-in anchor for suspended ceilings. Provide minimum ¼-inch size anchor, requires testing refer to Division 01.
D. Track Bedding Sealant: Per Section 07 92 00.
E. Wall finishes: Per Division 09 Finishes.
2.03 FINISHES
A. Galvanized Finish: Zinc coated per ASTM A653, G60.
PART 3 - EXECUTION
3.01 PREPARATION
A. Verify that substrate surfaces and building framing components are ready to receive work.
B. Beginning of installation means acceptance of existing conditions.
C. Layout markings shall not be made with xylene-based inks, paint, or dyes, or with other solvent-based products that may bleed through finishes.
3.02 ERECTION OF STUDDING
A. Perform work in accordance with, AISI and SSMA/ICC ES - 4943P.
B. Align floor and ceiling tracks; locate to wall or partition layout. Secure in place with specified fasteners at spacing as indicated on drawings or maximum 32 inches on centers.
C. Set floor track on continuous sealant, each side of track for exterior walls. Sealant type: Butyl Rubber per ASTM C920.
D. Track Splices: notch flanges to allow sliding tracks past each another 12". Attach as approved by manufacturer of system.
E. Place studs at 16 inches oc typically, or 12 inches oc in plumbing walls or as noted on drawings. Connect studs to tracks
using fastener or welding method.
F. No flame (oxyacetylene) torch cutting is permitted, use Plasma Arc cutting to make penetrations for conduit or piping where required.
G. Construct corners using minimum three studs.
H. Install double (boxed) studs at each jamb of each exterior door and window opening. Extend studs from floor to underside of structure above or to braces as indicated.
I. Stiffeners: Install 3/4 inch standard steel furring channel stiffeners within 24 inches of top and bottom runners and at mid
height of walls eight feet high. At higher walls, install stiffeners spaced maximum 48 inches on centers.
J. In areas where a finish material occurs on one side of wall only, provide full width bridging or bracing. See Structural Drawings:
K. Erect studs one piece full length. Splicing of studs is not permitted, except where detailed.
L. Studs shall not be cut to receive piping conduits and equipment.
M. Erect studs, brace and reinforce full strength to meet design requirements.
N. Extend stud framing through ceiling to underside of floor or roof structure above unless detailed otherwise.
O. Coordinate placement of insulation in multiple stud spaces made inaccessible after erection.
P. Install intermediate studs above and below openings to match wall stud spacing.
Q. Provide deflection allowance of 1/2 inch minimum in stud track, directly below horizontal building framing for non-load bearing framing.
R. Attach backing as detailed on the drawings for attachment of fixtures anchored to walls.
S. Where Casework is anchored as part of a larger wall or panel: Refer to Section 06 41 16.
T. Install framing between studs for attachment of mechanical and electrical items and to prevent stud rotation.
Touch-up damaged primed surfaces with primer.3.03
3.03 TOLERANCES
A. Maximum Variation from True Position: 1/8 inch in 10 feet.
B. Maximum Variation of any Member from Plane: 1/8 inch.
3.04 CLEANING
A. Clean substrate; remove dirt, oil, grease, construction markings, and foreign matter that could adversely affect final floor finish appearance or performance.
3.05 QUALITY CONTROL
A. Inspection of all field-welding operations shall be performed by qualified and certified Welding Inspector approved by the Structural Engineer.
B. Welding Inspector shall check materials, equipment, procedures, welds and certification of welders. Furnish the Owner with reports verified by the Inspector that welding has been performed in accordance with the Contract Documents.

END OF SECTION

SECTION 06 41 16 - CASEWORK

PART 1 GENERAL
1.01
A. Section Includes
1. Fabricated base cabinet units.
2. Fabricated wall units
3. Fabricated countertops.
4. [Teaching Wall Cabinets]
5. [Refurbishing of Caswork]
6. [Solid Phenolic Casework]
7. [Custom computer-numeric-control (CNC) milling]
B. Related Sections
1. Section 01 35 42, CAL Green Requirements
2. Section 06 61 16 Solid Polymer Fabrications
1.02 REFERENCES
A. ADA - Americans with Disabilities Act of 1990, as amended
1. ADA Standards - ADA Title II [III] Regulations and the 2010 ADA Standards for Accessible Design.
B. CBC - 2019 California Building Code
1. CBC Chapter 11B, Accessibility to Public Buildings, Public Accommodations, Commercial Facilities and Publicly Funded Housing
2. CBC Chapter 16, Structural Requirements
C. Californ Green Building Standards Code, CALGreen - 2019
D. ASCE/SEI 7-16 - American Society of Civil Engineers, Structural Engineers Institute, ASCE Standard.
E. NEMA LD 3 - High pressure Decorative Laminates: National Electrical Manufacturers Association, 2005 Edition
F. DOC PS 20 - American Softwood Lumber Standard
G. DOC PS 1-07 - Department of Commerce Product Standard, U.S. Product Standard for Construction and Industrial Plywood.
H. WI - Woodwork Institute, Architectural Woodwork Standards (AWS), Latest Edition.
I. ANSI A208.1 - Particle board.
J. [ANSI A208.2 Medium -Density Fiberboard-2009]
K. [ANSI/HPVA HP-1 - American National Standards for Hardwood and Decorative Plywood].
L. ASTM 84 - Standard Test Method for Surface Burning Characteristics of Building Materials.
M. California Title 17 Division 3 Subchapter 7.5 Air Bourne Toxic Control Measures, Secion 93120.1 through 93120.12.
N. SJVAPCD- San Joaquin Valley Air Pollution Control District.
O. Green Seal Standard GS-36, Commercial Adhesive

SECTION 06 41 16 - CASEWORK continued

1.04 SUBMITTALS
A. Action/Informational
1. Shop drawing including materials, component profiles, fatening methods, assembly methods, joint details, accessory listing and schedule of finishes.
2. Product data.
3. Hardware sample boards identified with the project name, cabinet manufacturer's name and address and one item of each type of hardware specified for installation, one panel of specified color and finish.
a. Additional Finsh Samples: If multiple colors and finishes are specified, submit samples of additional colors and finishes on manufacturer's standard sample size, but not less than 5 by 7 inches.
B. Record
1. Statement of qualification from fabricator.
2. WI Certifications.
C. Closeout
1. Record Documentation
D. CalGreen Submittals.
1. Product Data Sheets and Declaration Statements showing compliance with CALGreen Code per 1.04.L.
1.05 QUALITY ASSURANCE
A. Cabinets and countertops shall be manufactured in accordance with Section 10, 11 and Supplements of the latest edition of the Architectural Woodwork Standards of the Woodwork Institute for Grade specified herein or to higher standards as specified herein.
B. Fabricator Qualifications: A firm experienced in producing architectural woodwork similar to that indicated for this Project and with a record of successful in-service performance, as well as sufficient production capacity to produce required units. Company specializing in manufacturing the products specified in this section with minimum five years documented experience. [Cabinet manufacturer shall be a WI Licensed Fabricator and active member of the Woodwork Institute].
1. Installer shall be WI Certified.
C. Source Limitation: Engage a qualified woodworking firm to assume undivided rewponsibility for production and installation of interior architectural woodwork with sequence-matched wood veneers including wood doors where veneer matching includes door faces.
D. Before Delivery to the jobsite, the casework supplier shall submit a WI Certified Compliance Certificate (Certified Compliance Program) indicting the products furnished for this job, and certifying that they will fully meet all the requirements of the grade or grades specified.
E. Each elevation of casework and countertop shall bear a Certified Compliance Label.
F. First page of shop drawings shall bear the WI Certified Compliance Label. Shop drawing not conforming to this requirement will be rejected.
G. Statement shall appear prominently on the shop drawings certifying that all casework construction complies to the structural requirements of ASCE 7-16, Section 13.5 Table 13.5.1 for required horizontal force factor for anchorage of non-structural components.
H. One (1) copy of the latest issue of the WI AWS shall be made available for reference at the jobsite throughout the installation period.
I. Inspections by Authorized WI inspectors shall be made in accordance with the following schedule:
1. Shop inspection at place of manufacturer, prior to initial shipment of cabinet components to site.
2. Site inspection immediantely following installation of first cabinet components.
3. Site inspecion immediately following final installation of all cabinet components.
4. Additional site inspections may be required at the option of the Architect and at no cost to the Owner when certified WI inspection reports indicate unsatisfactory conformance with specified requirements.
5. Provide full written reports to Architect.
J. Written confirmation of all WI inspection shall be submitted, including a WI Certified Compliance Certificate for installation.
K. WI Certification costs shall be included.
L. Califorina Green Building Standards Code, CAL Green - 2019.
1. Adhesives, sealants, primers, and caulks shall comply with air quality management district rules where applicable, or SCAQMD Rule 1166 VOC limits, per CALGreen Tables 5.504.4.1 and 5.504.4.2.
2. Paints and Costing shall comply with VOC limits in Table 1 of the ARB, per CALGreen Tale 5.504.3.
3. Composite wood products (plywood, particle board, medium density fiberboard) shall comply with Formaldehyde limits per CALGreen Table 5.504.4.5.
M. Pre-installation Conference
1. Convene two weeks prior to commencin work of this section.
N. Forest Certification: For new wood products, provide materials produced from wood obtained from forest certified by an FSC-accreditied certification body to comply with FSC STD-01-001.
O. [Regulatory Requirements: Formaldehyde limits.
1. Hardwood plywood, particle board, and medum density fiberboard composite wood products used on the interior or exterior of the building shall meet the requirements for formaldehyde as specified in ARB's Air Toxic Control measure (ATCM) for Composite Wood (17 CCR 93120 et seq.). Those materials exempt by the ACTM must meet the specified emission limits, as shown in Table 5.504.4.5.
P. Mock-up
1. Provide full size base cabinet with countertop and upper cabinet of each casework type indicated, in specified finish with hardware installed. Include pairs of doors for both base and upper cabinet and at least one drawer.
2. Units will establish a minimum standard of quality for this Work.
3. Approved units may be used as part of the Work.
1.06 DELIVERY, STORAGE, HANDLING
A. Deliver all material only when the project is ready for installation and a clean storage has been provided in accordance with the WI Manual of Millwork.
1.07 FIELD MEASUREMENTS
A. Field Measurements: Where woodwork is indicated to fit to other construction, verify dimensions of other construction by field measurements before fabrication and indicate measurements on Shop Drawings. Coordinate fabrication schedule with construction progress to avoid delaying the Work.
1. Locate concealed framing, blocking, and reinforcements that support woodwork by field measurements before being enclosed and indicate measurements on Shop Drawings.
2. Established Dimensions: Where field measurements cannot be made without delaying the Work, establish dimensions and proceed with fabricating woodwork without field measurements. Provide allwoance for trimming at site, and coordinate construction to ensure that actual dimensions correspond to established dimensions.
1.08 COORDINATION
A. Coordinate the work with electrical rough-in and floor finish sections.
B. Coordinate sizes and locations of framing, blocking, furring, reinforcements, and other related units of Work specified in other Sections to ensure that interior architectural woodwork can be supported and installed as indicated.
1.09 FIELD CONDITIONS
A. Environmental Limitations: Do not deliver or install woodwork until building is enclosed, wet work is complete, and HVAC system is operating and will maintain temperature between 60 and 90 degree F and relative humidity between 17 and 50 percent during the remainder of the construction period as recommended by AWS for the location of the project.
1.10 WARRANTY
A. The manufacturer shall warrant products from delamination, loose edges, defective or broken hardware, broken casters, loose wood trim, and horizontal or vertical members coming apart from each other and in general against defects in materials and workmanship for five (5) years after Substantial Completion.
B. The manufacturer further agrees after delivery date, to repair or replace without charge any woodwork that is defective within the meaning of this warranty. The manufacturer agrees to pay charges for finishing or installing replaced woodwork. This Warranty is not effective if goods are repaired or replaced without first obtaining the manufactuer's written consent.
1.11 PROJECT CONDITIONS
A. [Existing casework to be refurbished. Location and casework units as descrbied on the Drawings.]
PART 2 - PRODUCTS
2.01 ACCEPTABLE MANUFACTUERERS
A. Products of the following laminate materials manufacturers form the basis for design and quality intended.
1. Formica Corporation, Cincinnati, OH.
2. Wilsonart International, Temple, TX.
3. ABET Inc., Inglewood, NJ.
4. Nevamar Corporation, Oendton, MD.
5. Arborite, Quebec, Cananda
6. Pionite Decorative Laminates, Maumee, IL.
7. Lamin-Art, Elk Grove Village, IL.
8. Chemetal, Easthampton, MA (Decorative metal Laminates)
9. Octopus Products International
10. Or equal as approved in accordance with Division 01, General Requirements for Substitution.
B. [Products of the following sheet material manufactuer's form the basis for design and quality intended.
1. Sierra Pine, Medford, OR.
2. Columbia Forest Products, Klamath Falls, OR.
3. Rosenburg Forest Products, Rosenburg, OR.
4. Or equal as approved in accordance with Division 01, General Requirements for Substitutions.]
2.02 GRADES
A. Provide plastic covered casework in accrdance with WI AWS, Section 10 for Custom [Econony] [Premium] Grade ASTM E84, Class B, Flame Spread: Less than 75, Smoke Devloped: less than 100.
B. Construction Style: Style A frameless.
C. Construction Type: Type I multiple self-supporting units rigidly joined together.
D. Door and Drawer Front Style: [Flush overlay]
2.03 CASEWORK UNITS
A. Casework indicted on drawing shall conform to model Series described below:
1. Base Cabinet: 100 Series
2. Drawer Base Cabinets: 200 Series
a. File drawers with built-in steel rail system for hanging folders.
2.04 LAMINATE MATERIALS
A. Plastic Laminate Cabinet Surfaces: NEMA LD 3, ASTM E84, Class B, Decorative High Pressure Laminate, General Purpose type, 0.028 inch thick at vertical surfaces (VGS), 0.050 inch thick at horizontal surfaces (HGS) and 0.042 inch thick (HGP) for post-formed work. Colors as selected, in wood grains, patterns or solids, Conform to Section 10, WI AWS.
B. Plastic Laminate Countertops: NEMA LD 3, ASTM E84, Class B, Decorative High Pressure Laminate, General Purpose type 0.042 inch thick (HGP) when post-formed, 0.050 inch thick (HGS) when flat. Colors as selected in wood grains, patterns or solids. Conform to Section 11, WI AWS.
C. [Plastic Laminate Countertops: NEMA LD 3, ASTM E84, Class B, Decorative High Pressure Laminates chemical and stain resistant type, 0.042 inch thick, colors as selected. Conform to Section 11, WI AWS.]
D. [Decorative Metal Lamintes: High Pressure Laminate
1. Base Metal: Aluminum [Steel], 0.037 inch HPL.]
E. Laminate Backing Sheet: NEMA LD 3, High-pressure decorative laminate, BKV Backing Grade, non-decorated high-pressure plastic laminate, with face material of 0.028 inch.]
F. Cabinet Liner CLS for cabinet interiors: NEMA LD 3, CLS grade 0.020 inch thick, high pressure decorative laminate.
G. Semi-exposed Areas of Cabinets: High-pressure laminate Cabinet Liner CLS [Low Pressure melamine overlay,] except as specified herein.
1. Apply Dcorative High Pressure Laminate, General Purpose, to all surfaces visible from a seated or standing position, including interior surfaces of open casework, shelving, and casework with glass doors, to sloped tops and to tops up to 72 inches above floor or visible from an upper level.
2. Apply Decorative High Pressure Laminate, Genreal Purpose, to shelving, horizontal suraces and all surface behind markerboards, [and all Teaching Wall Units].
2.05 [SOLID POLYMER COUNTERTOPS]
A. Per Section 06 61 16 Solid Polymer Fabrications.]
2.07 WOOD MATERIALS
A. Softwood Lumber: PS 20;, Graded in accordance with WI Custom Grade, Douglas Fir, Hemlock, Ponderosa Pine or Sugar Pine.

SECTION 06 41 16 - CASEWORK continued

2.08 CORE MATERIALS
A. Core, the following:
1. Wood Particleboard: ANSI A208.1, Table A, Grade M-2 [composed of 100 percent recycled wood chips,] 47 lbs/cu.ft. Medium Density Grade, made with water-resistant bainder, no added urea formaldehyde permitted, Title 17 CCR.
2. [Medium Density Fiberboard: ANSI A208.2,
a. Grade 155 MR 50 9moisture resistant): Medex, 100 percent pre-consumer recycled wood fiber, no formaldehyde added, Title 17 CCR by SierraPine, Extira by CraftMaster Manufacturing, Panel Source MDF or equal.
b. [Grade 155MR30; Medote II, no formaldehyde added, 100 percent pre-consumter recycled wood, Title 17 CCR by SierraPine.
3. [Fire-Rated particle board, "Duraflake FR" by Flakeboard Fort Mill, SC. Wood Particlboard: ANSI A208.1, Table A, composed of wood chips, 47 lbs/cu.ft. medium density made with water-resistant binder, no urea formaldehyde binder, [, Title 17 CCR]. Flame Spread 20, Smoke Developed 25.]
2.09 ACCESSORIES
A. Contact Adhesives: In accordance with Woodwork Institue of Type II rating, AWS, and specifically approved by WI for the area in which the Project is located. Wilsonart WA H2O, water-based contact adhesive, or equal.
1. Adhesives applied on-site shall comply with VOC content limits defined by SCAQMD Rule 1168 [and BAAQMD Regulation 8, Rule 51].
B. Fasteners: Size and type suit Application.
C. Bolts, Nuts, Washers, Lags, Pins and Screws: Of size and type to suite application.
D. Support angle brackets for countertops: 18" brackets, steel angle 1/4" thick, 2" legs, mitered and welded, ground smooth, unless noted otherwise on drawings, installed at 16" on center. Finish: backed enamel, off white.
E. Doorstop Blocks: Nylon type, 1 inch x 1 inch x 2 inches long.
F. Cable Grommets: Molded-plastic gromments 3 inch diameter and matching plastic caps with slot for wire passage, Hafele 429.99, color: black [Doug Mockett Company, brushed stainless steel, 3" diameter].
G. Edge Bandng: High Pressure Plastic Laminate, Premium Grade at countertop edges and at cabinet door, drawer and shelf edges. Color to match cabinet faces.
H. [Edge Banding for drawer and shelf edges - Schools: Premium Grade PVC 3 mm edge banding; at drawers of width to match component thickness, straight edge (no radius). Color as selected by Architect [K-12 Schools only, delete "drawer" and "shelf" in paragraph above].
I. [Edge Banding: Tee "T-Molding; Drawers and doors, extruded flat shaped; smooth finish, self locking serrated tongue of width to match component thickness. Color as selected by Architec][...specify only if client requests...]
J. [Glass: Clear tempered, 3/16 inch thick minimumm as specified in Section 0880 00.
1. Shop [Site] glaze glass materials using the Interior Dry method specified in Section 08 80 00.]
K. [Wire Door: As manufactured by Rockford Process Control, Inc.
1. Door frame: 5/16" in diameter, vertical door wires of 3/16 inch with beveled ends.
2. Provide with 5-knuckle hinges, hasp welded to door frame, and label holder to the vertical wires.
3. Door size(s): As indicated on Drawings.]
L. [Countertop Brackets: Surface-mounted Brackets EH Series [EH-1818] [[EH-1824]] for up to [24][[30]] inches deep counter, manufactured by Rakks Store, Needham, MA or equal. Refer to Drawings for sizes.]
M. [Ergonomic Keyboard Tray: Manufactured by Humanscale, New York, NY or equal.
1. Provide keyobard tray system for installation under countertop at indicated workstations.
2. Install components per manufacturer's recommendations.]
N. Wire Management: Mockett WM22A; Description: J-Shape, wire manager with flange fastened under a desk/work surface to route cables. Size 4-5/16"Hx1-3/32"D x 2-9/16" high trough. Color: Matte black.
O. [Louver vents: 3" diameter, stainless steel louver vents required at cabinets requiring venting, minimum of 2 vents for each 4 feet of linear base cabinet. Refer to drawings]
2.10 HARDWARE
A. Conform to WI Architectural Woodwork Standards (AWS) and CBC Section 11B-309 and 11B-225. Any hardware listed therein may be installed, except where those standards are exceeded as described below: "or equals" as substitiution may be submitted in accordance with Division 01 General Requirements.
1. Drawer Slides: Minimum 100 lb. capacity all drawers. Full extension ball bearing type only, Accuride 3832 Classic for 16 in. wide or less, 7432 full extension 100 lbs rated, ball bearing, for drawers 24 inch wide or less and 3640A full extension 200 lbs rated, for 42 inch wide or less.
2. Drawer Slides-Lateral files: Minimum 200 lb capacity all drawers. Full extension ball bearing type only, Accuride 3640A
3. [Drilled Hole type (spoon shaped): US Futaba Inc. nickel plated.]
4. Wall Cabinet Shelf Standards and Clips:
a. Flush type Brackets: KV#255BR steel:
1) Closed shelves Clips: KV#256 clips.
2) Open shelves Clips: KV#243ZC, let-in and screwed in place, for seismic restraint.
5. Hinges: Sizes: to fit door and panel thickness
a. Institutional heavy-duty Concealed, 3D Clip-On, ANSI/BHMA 156.9 Grade 1, 3/16 inch steel, Aximat 300 [and 200] Single Pivot, by Hafel America Co. Use Twin overlay hinge 334.06.902 where applicable. Matte Nickel finish.
b. [Institutional heavy-duty wrap-around, ANSI/BHMA 156.9 Grade 1, 5-knuckle, 0.095 inch steel, 32mm boring system on side panel, by RPC-Rockford Process Control, Inc.]
c. [Hinges: Concealed, European Type, Frameless, ANSI/BHMA A 156.9, BO 1602, Grade 2, Blum Clip 170.]
d. [Hinges: mortised, Bommer 7122 Steel Mortise Spring Pivot, adjustable spring tension [Double-acting Hinges; 3", Bommer No. 3029 zinc finish, 2 hinges per leaf.]
e. [Gate type spring pivot: 75 Pounds capacity, couble acting, adjustable tension, Bommer No. BM7112-zinc finish.]
6. Wire Pulls: U-shaped, Trimco/BBW No. 562-4, 1 inch satin stainless steel, P2 Series by Terry Hinge.
7. [Tab Pulls: Doug Mockett DP3B [DP3A] Drawer Pulls, tab pulls, 4" [3"] long]
8. Locks: 6 pin cylinders:
a. Schlage CL100 all doors locks and CL 200 all drawer lock, Schlage "C" keyway, 6-pin. [Removable Cores: CL777R
door locks and CL 888R drawer locks].
b. [OLYMPUS-700SC with Schlage "C" keyway [W Weiser keyway] all doors and 800SC with Schlage "C" keyway [W Weiser keyway] all drawers, 6-pin.}
c. [CompX/NATIONAL C9003 SC with Schlage "C keyway [CompX/NATIONAL C8173, 5 pin] all doors and C9001 SC with Schlage "C" keyway [C8175, 5 pin] all drawers, 6-pin [CCL R1 keyway].
d. [Key to match building keying system. Keying: Each room keyed differently [alike]. Each Area keyed differently [alike] from other Areas of site. "Area" is defined as like room type.]
e. [Locks shall have capacity for 15 [ ] primary key changes and up to 3 [ ] master keys. Each cabinet in a room shall have an individual primary key, and be master keyed alike.]
9. Elbow Catches: EPCO 1018 nickel at inactive cabinet door leaf.
10. Magnetic Catches: EPCO 591, all cabinet doors, 5 pound holding strength.
B. Finish: US-26D, Dull Chrome (Satin Chromium) plated [Powder Coated] [beige] [dove gray][powder-coated chrome]
[Custom Powder Coated, color to be selected by Architects]].
2.11 FABRICATION
A. Shop assemble casework for delivery to site in units easily handled and to permit passage through building openings.
B. When necessary to cut and fit on site, provide materials with ample allowance for cutting.
C. Apply plastic laminate finish in full uninterrupted sheets consistnent with manufacturer sizes. Make corners and joints hairline. Locate counter butt joints minimum 2 feet from sink cutouts. All patterns to run in the same direction.
D. Install one door stop block screwed on the inside bottom of the inactive leaf to prevent the door from being pushed down to gain entry at all double doors base cabinets. Secure with 2 screws 1-1/2 inch long at each block.
E. Shop cut openings, to maximum extent possible, to receive hardware, appliances, plumbing fixtures, electrical work, and similar items. Verify locations of cutouts from on-site dimensions. Locate openings accurately and use templates or roughing-in diagrams to produce accurately sized and shaped openings. Sand edges of cutouts to remove splinters and burrs. Seal contact surfaces of cut edges.
F. Provide access panels where required to access plumbing and associated casework utilities.
G. Countertop Backsplash: Integral coved splash joint [Assembly 2-Deck Mount], unless otherwise noted on drawings. Backsplash tops: Square with scribe.
H. High Pressure Plastic Laminate Countertop Edges:
1. Square edge: Self-edge Laminate shall be applied first with top laminate extending over the edge laminate in same method as Premium Grade. Eased exposed edges. Adhere with hot-melt adhesive.
2. [Rolled edge: ["Waterfall Edge"]["Full Round Edge" (bullnose)] for typical units.]
3. ["No-drip Waterfall Edge where sinks occur.]
I. Edge Banding: High Pressure Laminate with hot melt adhesive applied, prime before application of adhesive, at cabinet doors, drawers, shelves.
J. [Edge Banding - Schools: Premium Grade PVC 3 mm at drawer and shelf edges.] ... delete "drawer" and "shelves" in paragraph above....
L. Shelf Loading: 50 lbs per square foot or 50 lbs per cubic foot of total volume of cabinet whichever is less. In no case shall unsupported shelf exceed 36" wide without mid support.
M. Shelf Thickness: 1 inch. All shelf surfaces and edges shall be finished with High Pressure Decorative Laminate [PVC 3 mm edge for Schools] with hot melt adhesive [premium adhesive].
N. Install one grommet per workstation or at every 48 ubches of work counter.
O. [Fire-rated Countertops: As indicated on drawings.
1. Fire-treated Particle board: 42.7 pounds or less veneer density, 3/8 inch thick, flame spread less than 25, smoke density less than 450, ASTM E84.
2. Plastic Laminate: Fire-rated, NEMA LD-3, 1/32 inch thick, in solid colors and wood grain designs.}

City of Los Banos
At the Crossroads of California
520 'J' Street
Los Banos, California 93635

HUBER & HUBER Architects

10796 N. TEA PARTY LN
FRESNO, CA 93730-5920
ANN HUBER: 559.470.7721
KEITH HUBER: 559.304.3015

LICENSED ARCHITECT
ANN BENNETT HUBER
C24520
REN 03-31-21
STATE OF CALIFORNIA

Project Number:
1001006

ISSUE:

No.	Issued	Date	No.	Issued	Date

Agency Approval:

Client & Project Address:
LOS BANOS CITY HALL
LOS BANOS CITY HALL
520 'J' ST.
LOS BANOS, CA 93635

Project:
LOS BANOS CITY HALL ADA COUNTERS

Sheet Title:
SPECIFICATIONS

CONSTRUCTION DOCUMENTS

Fac No: Bldg No: N/A
Date: 10/6/2020 Client Project No: N/A

Sheet:
G0.11

If the sheet is not 30"x42", it is a reduced print. Scale Accordingly.

SECTION 06 41 16 - CASEWORK continued

PART 3 - EXECUTION
3.01 PREPARATION
A. Verify adequacy of backing and support framing.
B. Layout markings shall not be made with xylene-based inks, paint, or dyes, or with other sovent based products that may bleed through finishes.
3.02 INSTALLATION
A. Set and secure casework in strict accordance with the WI AWS.
B. Set shelves on specified clips, secure with ood screws each clip, front only. Confirm shelves spacing with Owner, do not proceed without Owner's approval.
C. Casework shall be anchored to walls or floors or both. Conform to ASCE 7-16, Section 13.5 Table 13.5-1 anchorage requirements.
1. Where casework is anchored on 16 gauge steel studs as part of the larger wall or panel: Use 16 gauge steel studs throughout and continuous between perpendicular intersections. [Refer to Section 05 40 00]
D. Countertops: Anchor securely by screwing through corner blocks of base cabinets or other supports into underside of countertop.
1. Align adjacent countertops and form seams to comply with manufacturer's writtne recommendations using adhesive in color to match countertop. Carefully dress joints smooth, remove surface scratches, and clean entire surface.
2. Install countertops with no more that 1/8 inch in 96-inch sab, bow, or other variation from a straight line.
3. Secure backsplashes to tops with concealed metal brackets at 16 inches o.c.
4. Caulk space between backsplash and wall with sealant specified in Division 07 Section "Joint Sealants".
G. [Countertop Brackets: Install to support counters that would be supporting computers at maximum spacing of 48 inch on center.]
3.03 ADJUSTING AND CLEANING
A. Adjust doors, drawers, hardware, fixtures and other moving or operating parts to function smoothly and correctly.
B. Clean casework, counters, shelves, hardware, fittings and fixtures.

END OF SECTION

SECTION 06 61 16 - SOLID POLYMER FABRICATIONS

1.01 SUMMARY
A. Section Includes: Provide solid surfacing fabrications including but not limited to following:
1. Lavatory countertops with seamed bowls.
2. Lavatory countertops with undermount bowls.
3. Lavatory countertops with integral bowls.
4. Counter tops for service areas
5. Window sills.
1.02 REFERENCE
A. Conform to current adopted reference standards by date of issue of the current code cycle and the date of the Contract Documents.
B. ADA - Americans with Disabilities Act of 1990 as amended
C. ADA/Standards - ADA Title III Regulations and the 2010 ADA Standards for Accessible Design.
D. CBC - 2019 California Building Code
E. CBC-11 – CBC Chapter 11B, Accessibility to Public Buildings, Public Accommodations, Commercial Facilities and Publicly Funded Housing
F. CBC-16 - CBC Chapter 16, Structural Requirements.
G. ASTM E84 - Surface burning characteristics of building materials.
H. ASTM D638 - Tensile Properties of Plastics.
I. ASTM D785 - Rockwell Hardness of Plastics and Electrical Insulating Materials.
J. SJVAPCD - San Joaquin Valley Air Pollution Control District regulations.
1.01 SUBMITTALS
A. Shop Drawings: Indicate dimensions, thickness, required clearances, tolerances, materials, colors, finishes, fabrication details, field jointing, adjacent construction, mounting methods, integration of [plumbing and electrical] components and anchorages.
B. Product Data: Provide data on specified component products.
C. Three samples illustrating color, textures and finishes, 6" x 6" each.
D. Manufacturer's Installation Instructions: Indicate preparation of opening required with rough-in sizes. Provide templates
for cast-in or placed frames or anchors.
E. Maintenance Data: Indicate list of approved cleaning materials and procedures required and provide list of substances that are harmful to product. Include instructions for stain removal and surface.
1.02 QUALIFICATIONS
A. Manufacturer: Company specializing in manufacturing this product as specified with minimum three years experience.
1.03 FIRE RESISTANCE REQUIREMENTS
A. Flame Spread: Less that 25. smoke density less than 450, ASTM E84.
1.04 ENVIRONMENTAL REQUIREMENTS
A. Do not install components when site conditions may be detrimental to product or curing.
1.05 QUALITY ASSURANCE
A. Mockups: build mockup of each type of Solid Polymer Fabrication.
B. Approved mockups may become part of the completed work if undisturbed at time of Substantial Completion.
1.06 FIELD MEASUREMENTS
A. Verify field measurements as indicated on shop drawings.
1.07 DELIVERY, STORAGE AND HANDLING
A. Delivery and Acceptance Requirements: Deliver no components to Project site until areas are ready for installation.
B. Storage and Handling Requirements:
C. Store components indoors prior to installation.
D. Handle materials to prevent damage to finished surfaces.
1.08 WARRANTY
A. Warrants product for a period of 1 year to repair or replace for products that fail in material or workmanship.
1.09 SEQUENCING
A. Sequence work to permit installation of adjacent affected construction, plumbing and electrical rough-in.

PART 2 - PRODUCTS
2.01 MANUFACTURERS
A. Manufacturer List: Products of following manufacturers are acceptable subject to conformance to requirements of Drawings, Schedules and Specifications:
B. Corian® by DuPont; HYPERLINK "http://www.corian.com" www.corian.com
C. Samsung Chemical USA; HYPERLINK "http://www.staron.com" www.staron.com
D. Wilsonart Contract; HYPERLINK "http://www.wilsonartcontract.com" www.wilsonartcontract.com
E. Substitution Limitations: This Specification is based on Corian® Products. Comparable Products from manufacturers listed herein will be accepted provided they meet requirements of this Specification.
2.02 MATERIALS
A. Homogeneous, acrylic surfacing materials, stain-resistant, non-porous with full depth color pattern, conforming to following:
1. Tensile Strength, ASTM D638: Minimum 6000 pounds per square foot.
2. Elongation, ASTM D638: 0.5 percent Maximum
3. Hardness, ASTM D785: 92 Rockwell M
4. Weight per square foot, 1/2 inch: 7 lbs. (Approximate)
5. Integral Sinks: as indicated on drawings, outside dim. Mounting method: Seamed undermount.
B. Adhesive: Neoprene-based panel adhesive or Type I solvent-based mastic type, approved for use by materials manufacturer. At joints, use manufacturers joint adhesive, color matched to material.
C. Sealant: Silicone type specified in Section 07 92 00 and approved by manufacturer.
D. Cleaner: type recommended by manufacturer.
E. Fasteners: use screws designed specifically for plastics. Self-threading screws acceptable for permanent installation. Provide threaded metal inserts for applications requiring frequent disassembly.
2.01 FABRICATION
A. Fabricate components by mold to achieve required shape and configuration. Comply with manufacturer written recommendations for fabrication.
A. Fabricate in shop to greatest completion possible.
B. Square edges, and square inside corners, eased.
C. Cure components before shipment, except sheet materials requiring site handling.
2.02 FINISH
A. Styles and Colors: as indicated on Drawings.

PART 3 - EXECUTION
3.01 EXAMINATION
A. Verify existing conditions are complete and ready to receive work of this Section.
B. Verify that joint preparation, substrates and affected dimensions are acceptable to manufacturer.
3.02 PREPARATION
A. Provide anchoring devices for installation and embedment.
B. Provide templates and rough-in measurements.
3.03 INSTALLATION
A. Install components, sinks according to shop drawings and manufacturer's instructions.
B. Align Work plumb and level.. Form joints using manufacturer's recommended procedures. Panel seams should not align with substrate seams.
C. Rigidly anchor to substrate to prevent misalignment. Utilize fasteners, adhesives and bonding agents as recommended by the manufacturer. Materials damaged as a result of installation or fabrication methods will not be accepted.
3.04 TOLERANCES
A. Maximum Variation From True Dimension: 1/8 inch.
B. Maximum Offset From True Position: 1/8 inch.
3.05 CLEANING
A. Clean and polish fabrications according to manufacturer's instructions.
3.06 PROTECTION OF FINISHED WORK
A. Protect finished work until Date of Substantial Completion.
B. Do not permit construction near unprotected surfaces.

END OF SECTION

SECTION 09 01 90 - REPAIRING AND PAINTING OF EXISTING PAINTED SURFACES

A. SECTION INCLUDES
1. Supply and apply interior painting to existing surfaces.
2. Preparing and repairing existing surfaces.
B. SUBMITTALS
1. Complete list of all materials to be furnished.
2. Manufacturer's standard color samples for each type of paint specified.submit four (4) samples of each color selected for each type of paint, on standard 8-1/2 by 11 inches for the required sheen, color, and texture.
C. QUALITY ASSURANCE
1. Certification of Materials: manufacturer shall certify that materials comply with requirements of this Section.
2. Paint materials shall comply with applicable requirements of the Food and Drug Administration's Lead Law and the California Air Resources Board and the Environmental Protection Agency.
3. Company specializing in manufacturing quality paints and finishes products with three years experience.
4. Applicator: Company specializing in commercial painting and finishing with three years documented experience.
5. Provide primers and undercoat paint produced by the same manufacturer as the finish coat.
D. DELIVERY, STORAGE AND HANDLING
1. Materials shall be delivered to project site in original unbroken containers bearing manufacturer's name, brand number and batch number.
E. ENVIRONMENTAL CONDITIONS
1. Provide continuous ventilation and heating facilities to maintain surface and ambient temperatures above 45 degrees F for 24 hours before, during and 48 hours after application of finishes.
2. Do not apply exterior coatings during rain, or when relative humidity is above 50 percent, unless permitted otherwise by manufacturer's instructions.
3. Provide lighting level sufficient to conduct painting operations.
F. PAINT MATERIALS
1. Dunn-Edwards Corporation, Los Angeles, CA.
2. Sherwin-Williams Company
3. Vista Paints, Fullerton, CA.
4. Frazee Paints, Anaheim, CA.
G. PREPARATION OF EXISTING PAINTED SURFACES
1. Examine surfaces to receive paint finish. Surfaces which are not properly prepared and cleaned or which are not in condition to receive the finish specified, shall be corrected before paint is applied.
2. Remove electrical plates, hardware, light fixture trim and fittings prior to preparing surfaces for finishing.
3. Ascertain that new paint system is compatible with existing coatings, gloss and high-gloss, and oil based paint systems to insure proper adhesion. Apply a "test patch" of 3 square feet and allow to dry for a week before testing adhesion in accordance with ASTM D3359.
4. Existing interior painted surfaces indicated to be painted, prepared as follows:
a. Clean all interior surfaces, remove surface contaminants without damaging the substrates or adjacent areas such as oils, grease, loose paint, cracking, blistering, peeling or flaking paint, dirt, foreign matter, rust, mold, mildew, and all other surface contaminants that will interfere with adhesion of subsequent coats. Let dry thoroughly, LIGHT SAND all surfaces to receive new finishes. Repair existing minor defects, prime bare areas with specified primer.
b. Gypsum Board: remove contamination from surfaces and prime to show defects, if any. Prepare surfaces to align and to match adjacent surfaces. Feather edges into the existing adjacent surface. Repair cracks, holes, gouges and damaged spots larger than 1/2", per Section 09 29 00-Gypsum Board.
c. Work by experienced skilled craftsmen only. Apply finishes evenly and be free from runs, sags, crawls, or other defects.
d. Glossy surfaces of existing paint films must be cleaned and dulled before repainting. Wash thoroughly as specified and dull by sanding. Degloss all glossy and previously enameled surfaces to provide a roughened surface or "tooth" for good adhesion of subsequent coats.
e. Apply separation coats to prevent non-compatible coatings from having contact approved by the coating manufacturer. Paint as scheduled.
H. PROTECTION
1. Protect work of other trades or existing adjacent surfaces or areas, whether to be coated or not, against damage from coating. Correct damage by cleaning, repairing, replacing and recoating as acceptable to the Inspector. Leave in an undamaged condition.
2. Provide sufficient drop cloths, shields, and protective equipment to prevent spray or droppings from fouling surfaces, furniture, equipment, cabinets, etc. in all areas required to complete the work.
3. Protect prefinished surfaces, lawns, shrubbery and adjacent surfaces against paint and damage.
4. Protect surfaces, equipment and fixtures from damage resulting from use of fixed, movable and hanging scaffolding, planking and staging.
5. Place all waste materials, cloths, and material that may constitute a fire hazard in closed metal containers and remove daily from the site.
6. Remove electrical plates, surface hardware, fittings and fastenings, prior to painting operations. These items are to be carefully inventoried and marked, stored, cleaned, and replaced at the completion or work in each area. Do not use solvent to clean hardware or items that may remove permanent lacquer finish.
7. Provide "WET PAINT" signs, barricades and other devices required to protect newly coated finishes. Remove temporary protective wrappings provided by others for protection of their work, after completion of coating operations.
I. CLEANING, TOUCH-UP AND REFINISHING
1. As work proceeds and upon completion, promptly remove paint where spilled, splashed, or spattered.
2. During progress of work keep premises free from any unnecessary accumulation of tools, equipment, surplus materials, and debris.
3. Upon completion of work remove all rubbish, paint cans and accumulated materials resulting from work in each space or room. All areas shall be left in a clean, orderly condition to the satisfaction of the Owner.
4. Upon completion of painting, clean glass and paint spattered surfaces. Remove spattered paint by washing, scrapping or other professional methods using care not to scratch or damage adjacent finished surfaces.
J. SCHEDULE: INTERIOR SURFACES
1. Refer to Section 09 90 00 Painting.

END OF SECTION

City of Los Banos
At the Crossroads of California
520 'J' Street
Los Banos, California 93635

HUBER & HUBER Architects
10796 N. TEA PARTY LN
FRESNO, CA 93730-5920
ANN HUBER: 559.470.7721
KEITH HUBER: 559.304.3015

LICENSED ARCHITECT ANN BENNETT HUBER C24520 REN. 03-31-21 STATE OF CALIFORNIA

Project Number: 1001006

ISSUE:

No.	Issued	Date	No.	Issued	Date

Agency Approval:

Client & Project Address:
LOS BANOS CITY HALL
LOS BANOS CITY HALL
520 'J' ST.
LOS BANOS, CA 93635

Project:
LOS BANOS CITY HALL ADA COUNTERS

Sheet Title:
SPECIFICATIONS

CONSTRUCTION DOCUMENTS

Fac No: **Bldg No:** N/A
Date: 10/6/2020 **Client Project No:** N/A
Sheet:
G0.12

Please Recycle

SECTION 09 22 16 - NON STRUCTURAL METAL FRAMING

PART 1 - GENERAL
1.01 SUMMARY
A. Section Includes:
1. Formed metal stud framing at interior partitions.
2. Framing accessories.
B. Related Sections:
1. Section 05 40 00 - Cold Fromed Metal Framing for structual applications
1.02 REFERENCE STANDARDS
A. Conform to current adopted reference standards by date of issue of the current code cycle and the date of the Contract Documents.
B. AISI - American Iron and Steel Institute
1. S100 - Design of Cold-Formed Steel Structual Members
2. S220 - Cold-Formed Steel Framing-Nonstructural Members
C. ASTM International
1. A1003-Steel Sheet, Carbon, Metallic-and Nonmetallic-Coated for Cold-Formed Framing Members
2. C 645 - Stand Specification for Nonstructural Steel Framing Members.
3. A653/A653M - Steel Sheet, Zinc-Coated (galvanized) or Zinc-Iron Alloy-Coated (Galvannealed) by the Hot-Dip Process.
4. C 754 - Installation of Steel Framing members to receive Screw-Attached Gypsum Panel Products.
5. C 1513 - Steel Tapping Screws for Cold-Formed Steel Framing Connections.
D. CBC California Building Code 2019, Chapter 22.
E. ICC-ES-ICC Evaluation Service, International Code Council
1. AC46-Acceptance Criteria for Cold-Formed Steel Framing Members.
2. AC70-Acceptance Criteria for Fasteners Power-Driven into Concrete, Steel and Masonry Elements
3. AC86-Acceptance Criteria for Cold-Formed Steel Framing Members-Interior Non-load-Bearing Wall Assemblies
4. AC118-Acceptance Criteria for Tapping Screw Fasteners.
F. SFIA - Steel Framing Industry Association
1. Product Technical Information.
G. SSMA-Steel Stud Manufactures Association
1. Product Technical Information
1.03 SUBMITTALS
A. Product Data: Manufacturers' printed materials demonstrating compliance with specified requirements.
B. Test and Evaluation Reports: Current Evaluation Reports, from ICC-ES.
C. Qualification Statement: For manufacturer
1.04 QUALITY ASSURANCE
A. Code-Compliance Certification of Studs and Tracks: Provide Documentation that framing memebers are certified according to the product-certification program of the Steel Framing Industry Association (SFIA) or be a part of a similar organization that provides verfiable code compliance program.
B. Manufacturer: Current member of SFIA and/or SSMA, regularly and continuously engaged in the manufacturing of non-structural metal framing members for not less than five (5) years.
1. SSMA: Steel Stud Manufacturers Associations, ICC ESR-3064P
2. ClarkDietrich Building Systems, ICC ESR-1166P
3. Cemco California Expanded Metal Products Company, ICC ESR-3016
1.05 DELIVER, STORAGE, AND HANDLING
A. Protect cold-formed metal framing from corrosion, deformation, and other damage during delivery, storage, and handling as required by AISI's "Code of Standard Practice".
PART 2 - PRODUCTS
2.01 REGULATORY REQUIREMENTS AND PERFOMANCE CRITERIA
A. The deflection of steel structural members shall not exceed that permitted by AISI S100.
B. Power acturated fasteners shall be qualified in accordance with ICC-ES AC70.
C. The design and installation of nonstructural members utilized in cold-formed steel light-frame construction shall be in accordance with AISI S220.
D. Headers, including box and back-to-back headers, and double and single L-headers shall be designed in accordance with AISI S100, or proprietary prefagricated headers qualified by current ICC-ES Evaluation Report under AC46.
E. Wall studs shall be designed in accordance with AISI S100.
F. Steel studs, non-load bearing, used in gypsum board assemblies shall comply with ASTM C 645.
G. Steell framing for gypsum boards shall be assembled and installed in compliance with ASTM C754.
H. Non-structural metal framing shall be qualified by current ICC-ES Evaluation Reports under AC46 or AC86.
2.02 MATERIALS
A. Framing Members, General: Comply with ASTM C 645 for conditions indicated.
B. Steel: ASTM A 1003, Class G60 hot dip galvanized, Grade ST33H, minimum base-steel thickness 0.0329 inch (20 gauge) before galvanizing. Minimum material's yield strength, 33 ksi.
1. Protective Coating: Comply with ASTM C645.
a. Coating shall demonstrate equivalent corrosion resistance with an evaluation report acceptable to the authorities having jurisdiction.
b. Galvanealed products are not acceptable.
2.03 FABRICATION
A. Fabricate assemblies to sizes and profiles required; with framing members fitted, reinforced and braced to suit design requirements.
B. Studs: Non-load bearing rolled steel, channel shaped, punched for utility access.
1. Depths as indicated on Drawings.
2. Flange Width: 1-5/8 inches unless indicated otherwise.
C. Bottom Track: Same material and finish as studs, channel shaped.
D. Cold-Rolled Channel Bridging: Steel, 0.053-inch (16) gauge minimum base-metal thickness, with minimum 1/2-inch wide Flanges.
1. Depth: As indicated on drawings.
2. Clip Angle: Not less than 1-1/2 by 1-1/2 inches, 0.053-inch-thick (16 guage), galvanized steel.
E. Hat-Shaped, Rigid Furring Channels: ASTM C 645.
1. Depth: 7/8 inch.
F. Prefabricated Headers: as indicated on drawings.
2.04 ACCESSORIES
A. Mechanical Fasteners: ASTM C 1513, corrosion-resistant-coated, self-drilling, self-tapping steel drill screws.
1. Head Type: Low-profile head beneath sheathing, manufacturer's standard elsewhere.
2. Size: #8 by 3/8 inch unless indicated otherwise.
3. Screws shall be qualified by current ICC-ES Evaluation Report under AC118.
B. Anchorage Devices: Drilled Expansion Anchors:
1. Wedge Type: KWIK Bolt TZ Concrete Anchor, 3/8 to 3/4 inch diameter, ICC ESR-1917, by Hilti Inc., Tulsa, Ok.
a. Eyebolt HHDCA drill-in anchor for suspended ceilings. Provide minimum 1/4-inch size anchor, requires testing refer to Division 01.
2. Adhesive Anchors System:
a. For fully grouted CMU, lightweight concrete construction per ICC ES-1385, Hilti KWIK Bolt 3 (KB3).
b. For Normal Weight concrete with minimum compressive strength of 200 psi or 4000 psi ICC ESR-2322, Hilti HIT RE 500 Adhesive Anchor System.
C. Anchorage Devices, Powder Actuated:
1. Install to conform to the load requirements of this Section and Tables 1, 2, 3 and 4 of ESR 1663. Minimum diameter: 0.145 inch diameter.
a. Utilize tools as recommended by the manufacture in compliance with ICC numbers.
b. ICC ESR-1663 Hilti Inc; Fasteners-Manual, Pneumatic, or Powder-Driven Steel Studs and Nails.
2. Allowable Loads: Values listed in Tables 1-5, ESR 1663.

SECTION 09 22 16 - NON STRUCTURAL METAL FRAMING continued

D. Metal Backing: Metal-Lite Flushmount & Standard backing, 20 guage unless noted otherwise.
E. Mineral Wool: Specified in Section 07 84 00 Firestopping.
F. Fire-rated Sealant: Specified in Section 07 84 00.
PART 3 - EXECUTION
3.01 EXAMINATION
A. Verify that conditions are ready to receive work.
B. Verify field measurements.
C. Verify that utility rough-ins are in proper location.
D. Beginning of installation means installer accepts existing conditions.
3.02 ERECTION
A. For partitions supporting wall-hung plumbing fixtures, casework, or wall-mounted equipment, all exterior walls, and framing of door and borrowed lite openings, refer to Section 05 40 00.
B. Perform work in accordance with AISI S240, ASTM C 754, and SFIA Product Technical Information or SSMA Product Technical Information or SSMA Product Technical Information
1. Gypsum Board Assemblies: Also comply with requirements in ASTM C 840 that apply to framing installation.
C. Layout marking shall not be made with xylene-based inks, paint, or dyes, or with other solvent-based products that may bleed through finishes.
D. Install tracks (runners) at floors and overhead supports. Extend framing full height to structural supports or substrates above suspended ceilings, except where partitions are indicated to terminate below ceilings. Continue framing around ducts penetrating partitions above ceililng.
1. Do not install post-installed concrete anchors until all prestressing and reinforcing steel locations have been marked on the surface and approved by the Inspetor of Record.
2. Install floor track in bedding sealant as specified in Section 07 92 00.
3. Slip-Type Head Joints: Where framing extends to overhead structual supports, install to produce joints at tops of framing systems that prevent axial loading of finished assemblies.
4. Attach topand bottom runner channels at ends and 24 inches on center maximum.
E. Opening Framing
1. Frame openings wider that 32 inches as specified in Section 05 40 00.
2. For through-wall openings of 32 inches or less:
a. A stud shall be adjacent to all through-wall openings.
b. Studs shall be securely anchored to opening frame anchor clips by bolt or screw attachment.
c. A header shall be formed over opening, frames, and a sill below opening frames, with a cut-to-length section of runner placed horizontally with the flanges cut and web bent vertically at each end, and securely attached to the adjacent vertical studs.
d. Additional cut-to-length vertical ("cripple") studs shall be added above and below openings to comply with stud spacing requirements.
F. Install studs vertically at 16 inches on centers.
1. Studs where ceramic tile is applied on one or both sides higher than 36 inches: 12 inch spacing required.
2. At slip-type head joints, cut studs 1/2 inch shorter than required length and fit into top runner. Fasten studs to top runner in manner permitting runner movement.
3. Connect studs to tracks using one fastener at each flange.
4. Install studs so flanges within framing system point in same direction.
5. Align stud web openings.
6. Construct corners using minimum three studs.
7. Stud spicing not permissible.
8. Where studs are installed directly against exterior masonry walls or dissimilar metals exterior walls, install isolation strip between studs and exterior wall.
9. Where studs are shown to terminate above suspended ceilings, provide bracing as shwon or extend studs to underside of structure overhead.
G. Fit runners under and above openings; secure intermediate studs at spacing of wall studs.
H. Direct Furring: Attach to concrete or masonry with stub nails, screw designed for masonry attachments, or power-driven fasteners spaced 24 inches on center.
1. Where furring is installed directly against exterior masonry walls or dissimilar metals at exterior walls, install isolation strip between furring and exterior wall.
I. Install anchors and blocking for electrical and mechanical work to be placed in or behind stud framing.
J. In areas where a finish material occurs on one side of wall only provide bridging or bracing. Two systems permitted:
1. Install 3/4 inch x 16 gage continuous brace through stud punch-outs, fastened to studs with angle clips welded or screw fastened, spaced as scheduled below.
2. Install 1-1/4 inch x 16 gage strap, 3/4 inch x 16 gage cold-rolled channel or 2-1/2 inch 20 gage stud continuous across unrestrained edges of studs, screw fastened or welded to each stud, and connected to one blocking memeber screw fastened or welded to adjacent studs.
K. Lateral Bracing Schedule: Install bridge U-Channel bracing, cold rolled channel CRC (16 guage), attached to wall studs with steel clip angle, 1/2 inch less width of wall, using (4) S-12, #10, (2) each leg at per horizontal spacing below per Section D3 AISI. Refer to drawings for strap bracing method where required.
1. Wall Stud Size — Bracing Spacing on center (horizontal), maximum
2. 2-1/2 inch — 2'-6"
3. 3-5/8 or 4 in — 4'-0"
4. 6 inch — 6'-0"
L. Refer to Drawings for indication of partitions extending to ceiling only and for partitions extending through ceiling to structure above. Maintain clearance under structural building mumbers to avoid deflection transfer to studs.
M. Verify installation of insulation in multiple stud spaces made inaccessible after stud framing erection.
N. No flame (oxyacetylene) torch cutting is permitted, use Plasma Arc cutting to make penetrations for conduit or piping where required.
3.03 CLEANING
A. Clean substrate; remove dirt, oil, grease, construction markings, and foreign matter that could adversely affect final floor finish appearance or performance.
3.04 TOLERANCES
A. Level and plumb: not more that 1/8" in 10'-0".
B. Fastening Surfaces: Install each steel framing and furring member so fastening surfaces vary not more than 1/8 inch from the plane formed by the faces of adjacent framing.

END OF SECTION.

SECTION 09 29 00 - GYPSUM BOARD

A. SECTION INCLUDES
1. Gypsum Board Panels.
B. SUBMITTALS
1. Product Data: For each type of product indicated.
2. Shop Drawings: Show locations, fabrication, and installation of control and expansion joints including plans, elevations, sections, details of components, and attachments to other units of Work.
C. MANUFACTURERS
1. Products of following manufacturers form basis for design and quality intended.
a. United States Gypsum Corporation, Chicago, IL.
b. Georgia-Pacific, Atlanta, GA.
c. National Gypsum Co./Gold Bond Building Products, Charlotte, NC.
D. BOARD MATERIALS
1. Fire-rated Gypsum Board: ASTM C1396; Type X, fire resistive type, UL rated; 5/8 inch thick, maximum permissible length; ends square cut, tapered round edges, USG SHEETROCK BRAND, FIRECODE "C" Core, SW Edge or equal.
E. PREPARATION
1. Verify that site conditions are ready to receive Work.
2. Beginning of installation means acceptance of substrate.
F. GYPSUM BOARD INSTALLATION
1. Install gypsum board in accordance with ASTM C840, GA 201, GA 216 and Section 2511A California Building Code.
2. Rated and shielded gypsum board: Erect single **[or double layer]** fire-rated gypsum board panels in accordance with Table 705.4, Note a, and Section 708 California Building Code, and GA-600, for one-hour or two hour, fire-rated, non-bearing Fire Walls or Fire Partitions, steel or wood stud construction.
3. Gypsum board panels install parallel to vertical studs or framing with screws spaced at 8" on center at vertical edges, and 12" on center in field and at top and bottom, and 12" on center with screws at ceilings. Solid backing not required at joints running perpendicular to studs and framing members for walls. Stagger vertical joints 24 inches on centers each side and opposite sides. Where joints are not staggered required minimum 24 inches, solid backing shall be provided. All joints shall be treated except as provided herein.
4. Place control joints consistent with lines of building spaces as indicated or at maximum of 30 ft on centers. At rated walls, provide with fire rated panels same as wall construction.
5. Place corner beads at external corners. Use longest practical length. Place edge trim where gypsum board abuts dissimilar materials.
6. Seal all cutout and penetrations: For electrical, mechanical, plumbing and structural framing cutouts and penetration at interior surfaces. Per Section 07 92 00 for non-rated wall, and fire-rated sealant for rated walls per section 07 84 00.

END OF SECTION

SECTION 09 30 50 TILE SETTING MATERIALS AND ACCESSORIES

PART 1 GENERAL
1.01 SECTION INCLUDES
A. Finishing and edge-protection profiles for walls and countertops.
B. Setting materials: adhesives, mortars, grouts, and sealants.
1.02 RELATED SECTIONS
A. Section 07 92 00 - Joint Sealants.
B. Section 09 29 00 - Gypsum Board.
C. Section 09 30 00 - Tiling.
1.03 REFERENCES
A. Tile Council of North America (TCNA) Handbook for Ceramic Tile Installation.
B. American National Standard Specifications for the installation of ceramic tile A108 / A118 / A136.1.
1.04 SUBMITTALS
A. Submit under provisions of Section 01 30 00.
B. Product Data: Manufacturer's data sheets on each product to be used, including:
1. Preparation instructions and recommendations.
2. Storage and handling requirements and recommendations.
3. Installation methods.
C. Verification Samples: For each finish product specified, two samples, minimum size 6 inches (150 mm) long, representing actual product, color, and finish.
D. Manufacturer's Certificates: Certify products meet or exceed specified requirements.
1.05 QUALITY ASSURANCE
A. Manufacturer Qualifications: Company specializing in manufacturing products specified in this section with minimum ten years experience.
B. Installer Qualifications: Company specializing in performing the work of this section with minimum five years experience.
C. Source Limitations for Setting Materials and Accessories: Obtain product of a uniform quality for each application condition from a single manufacturer.
D. Mock-Up: Provide a mock-up for evaluation of surface preparation techniques and application workmanship.
1. Finish areas designated by Architect.
2. Do not proceed with remaining work until workmanship, color, and sheen are approved by Architect.
3. Refinish mock-up area as required to produce acceptable work.
E. Preinstallation Conference: Conduct conference at the Project site.
1. Convene one week prior to commencing work of this section.
2. Require attendance of installation material manufacturer, tile supplier, tile installer and installers of related work. Review installation procedures and coordination required with related work.
3. Meeting agenda includes but is not limited to:
a. Surface preparation.
b. Tile and installation material compatibility.
c. Edge protection, transition and pre-fabricated movement joint profiles.
d. Waterproofing techniques.
e. Crack isolation techniques.
1.06 DELIVERY, STORAGE, AND HANDLING
A. Store products in manufacturer's unopened packaging until ready for installation.
B. Protect materials from exposure to moisture. Do not deliver until after wet work is complete and dry.
C. Store materials in a dry, warm, ventilated weathertight location.

END OF SECTION

SECTION 09 30 50 TILE SETTING MATERIALS AND ACCESSORIES continued

1.07 PROJECT CONDITIONS
A. Maintain environmental conditions (temperature, humidity, and ventilation) within limits recommended by manufacturer for optimum results. Do not install products under environmental conditions outside manufacturer's absolute limits.
1.08 COORDINATION
A. Coordinate Work with other operations and installation of floor finish materials to avoid damage to installed materials.
PART 2 PRODUCTS
2.01 MANUFACTURERS
A. Acceptable Manufacturer: Schluter Systems, L.P., 194 Pleasant Ridge Road, Plattsburgh, NY 12901-5841. ASD. Tel: (800) 472-4588. Fax (800) 477-9783. E- HYPERLINK "mailto:specassist@schluter.com"mail:specassist@schluter.com. Web: HYPERLINK "http://www.schluter.com/"www.schluter.com.
B. Acceptable Manufacturer: Schluter Systems (Canada) Inc., 21100 Chemin Ste-Marie, Ste- Anne-de-Bellevue, QC H9X 3Y8. Tel: (800) 667-8746. Fax (514) 336-2410. E- HYPERLINK mailto:specassist@schluter.com"mail:specassist@schluter.com. Web: HYPERLINK "http://www.schluter.ca/"www.schluter.ca.
C. Requests for substitutions will be considered in accordance with provisions of Section 01 60 00.
2.02 FINISHING AND EDGE-PROTECTION PROFILES FOR WALLS AND COUNTERTOPS
A. Schluter-DESIGNBASE - SL
1. Description: Anodized Aluminum Baseboard profile comprised of a symmetrically- rounded top, flat exposed face, and 5/16 inch (8 mm) radius lower section.
2. Corners:
a. Provide with matching inside corners.
b. Provide with matching outside corners.
c. Provide with matching connectors.
d. Provide with matching end caps.
e. Provide with matching Sealing Lip.
3. Material and Finish:
a. AE - Satin Anodized Aluminum.
b. AEEB - Anodized Aluminum with Brushed Stainless Steel appearance
c. MBW - Matte White color-Coated Aluminum.
1. Height:
a) 2-3/8 inch (60 mm).
b) 3-1/8 inch (80 mm).
c) Height as required.
2.03 SETTING MATERIALS
A. Installation methods as specified in Section 09 30 00 - Tiling.
PART 3 EXECUTION
3.01 EXAMINATION
A. Do not begin installation until substrates have been properly prepared.
B. If substrate preparation is the responsibility of another installer, notify Architect of unsatisfactory preparation before proceeding.
3.02 PREPARATION
A. Clean surfaces thoroughly prior to installation.
B. Prepare surfaces using the methods recommended by the manufacturer for achieving the best result for the substrate under the project conditions.
3.03 INSTALLATION
A. Install in accordance with manufacturer's instructions.
3.04 PROTECTION
A. Protect installed products until completion of project.
B. Touch-up, repair or replace damaged products before Substantial Completion.

END OF SECTION

SECTION 09 30 13 TILE

PART 1 - GENERAL
1.01 SECTION INCLUDES
A. Ceramic tile at walls and base, using full setting bed application method.
1.02 REFERENCES
A. ADA – Americans with Disabilities Act of 1990
B. ADA Standards – ADA Title II Regulations and the 2010 ADA Standards for Accessible Design.
C. ANSI/TCA A108.1B - Installation of Ceramic Tile on Cured Portland Cement Mortar Setting Bed with Dry-set or Latex-Portland Cement Mortar.
D. ANSI/TCNA A108.10 - Installation of Grout in Tile Work.
E. ANSI/TCNA A118.6 - Cement Grouts for Tile Installation.
F. ANSI/TCNA A118.1 - Dry-Set Portland Cement Mortar.
G. ANSI/TCNA A118.4 - Latex-Portland Cement Mortar.
H. ANSI/TCNA A118.7 - Polymer Modified Tile Grouts for Tile Installation.
I. ANSI/TCNA A118.10 - Waterproof Membranes for Thin-set Ceramic Tile and Dimension Stone Installation.
J. ANSI/TCNA A137.1 - Ceramic Tile.
K. ASTM A185 - Steel Welded Wire Fabric, Plain, for Concrete Reinforcement.
L. ASTM C144 - Aggregate for Masonry Mortar.
M. ASTM C150 - Portland Cements.
N. ASTM C207 - Hydrated Lime for Masonry Purposes.
O. ASTM C373 - Water Absorption, Bulk Density, Apparent Porosity and Apparent Specific Gravity of Fired Whiteware Products.
P. ASTM C1028 - Static Coefficient of Friction. COF of at least 0.6.
Q. ASTM D1056 - Flexible Cellular Materials.
R. ASTM C171 - Sheet Materials for Curing Concrete.
S. ASTM C920 - Elastomeric Joint Sealants.
T. TCNA (Tile Council of North America) - Handbook for Ceramic Tile Installation, Latest Edition.
U. AQMD – Air Quality Management District.
1.03 SUBMITTALS
A. Product Data: For each type of tile, bond coat, grout, and other products specified.
B. Shop Drawings: Include following:
1. Tile patterns and locations.
2. Widths, details, and locations of expansion, contraction, control, and isolation joints in tile substrates and finished tile surfaces.
3. Samples for Verification: Of each item listed below, prepared on Samples of size and construction indicated. Where products involve normal color and texture variations, include Sample sets showing full range of variations expected.
4. Each type and composition of tile and for each color and texture required, at least 12 inchessquare, mounted on braced cementitious backer units, and with grouted joints using product complying with specified requirements and approved for completed work in color or colors selected by Architect.
5. Full-size units of each type of trim and accessory for each color required.
6. Metal edge strips in 6-inchlengths.
7. Product Certificates: Master Grade Certificate signed by the manufacturer certifying that products furnished comply with requirements of Standard Grade.
8. Qualification Data: For firms and persons specified in "Quality Assurance" Article to demonstrate their capabilities and experience. Include lists of completed projects with project names and addresses, names of architects and owners, and other information specified.
1.04 QUALITY ASSURANCE
A. Installer Qualifications: Engage experienced installer who has completed tile installations similar in material, design, and extent to that indicated for this Project and with record of successful in-service performance. Minimum 5 years of documented experience of tile installation.
B. Source Limitations for Tile: Obtain each color, grade, finish, type, composition, and variety of tile from one source with resources to provide products from same production run for each contiguous area of consistent quality in appearance and physical properties without delaying Work.
C. Source Limitations for Setting and Grouting Materials: Obtain ingredients of uniform quality for each bond coat, and grout component from single manufacturer and each aggregate from one source or producer.
D. Mockups: Before installing tile, construct mockups for each form of construction and finish required to verify selections made under Sample submittals and to demonstrate aesthetic effects and qualities of materials and execution. Build mockups to comply with following requirements, using materials indicated for completed Work.
E. Locate mockups in location and of size indicated or, if not indicated, as directed by Architect.
F. Notify Architect 7 days in advance of dates and times when mockups will be constructed.
G. Demonstrate proposed range of aesthetic effects and workmanship.
H. Obtain Architect's approval of mockups before proceeding with final unit of Work.
I. Maintain mockups during construction in undisturbed condition as standard for judging completed Work.
a. Approved mockups in undisturbed condition at time of Substantial Completion may become part of completed Work.
J. Pre-installation Conference
1.05 DELIVERY, STORAGE AND HANDLING
A. Deliver products to site only in cartons which have been grade sealed by manufacturer in accordance with ANSI A137.1 and with grade seals unbroken. Seconds grade seal quality not permitted.
B. Tiles delivered to job or installed in Work that do not fall within specified standards of quality or accepted color range shall be removed from jobsite and properly be replaced with acceptable material.
C. Store and protect products in dry, secure areas.
1.06 ENVIRONMENTAL REQUIREMENTS
A. Do not install volatile materials in a closed, unventilated environment.
B. Maintain 50 degrees F or above during installation of adhesive and grout materials.
C. Shade work from direct sunlight during tile installation as needed to prevent rapid evaporation caused by excessive heat.
1.07 MAINTENANCE
A. Extra Materials
B. Extra Materials shall be from same production run as installed materials.
C. Wrap or crate for storage and label for contents and dates and locations of related installations.
D. Deliver Extra Materials to Site as directed by Owner.
E. Tile. For each type, size and color or finish of tile provide, as extra materials, a quantity equal to approximately 2-percent of the quantity required for its installation; round quantity up to next higher full carton.
F. Special Shapes. For each type, size and color or finish of special shaped tile required, provide, as extra materials, a quantity equal to the following.
a. Coved Base: 10-linear-feet
b. Formed Coved Base Corners: 6 pieces, each inside and outside
c. Bullnose Tile: 15-linear feet
d. Bullnose Corner: 6 pieces PART 2 - PRODUCTS
2.01 MANUFACTURERS
A. Products of following manufacturers form basis for design and quality intended.
B. Dal-Tile, Corona, CA./American Olean Tile, City of Industry, CA.
C. Interceramic Inc., Anaheim, CA.
D. SpecsCeramics, Inc., Anaheim, CA.
E. Or equal as approved in accordance with Division 01, General Requirements for Substitutions.
2.02 TILE
A. Ceramic Wall Tile: ANSI/TCA A137.1, conforming to following:
B. Moisture Absorption As permitted by ANSI A137.1.
2. Size To Match Existing
1. Surface Finish: To Match Existing
2. Colors: To Match Existing
3. Patterns: Per Architectural Drawings.
B. Base: Match wall tile for moisture absorption, surface finish and color, coved bottom.
C. Wainscot Cap: Match wall tile for moisture absorption, surface finish and color, bullnosed top edge.
D. Corners: coved at inside corners and bullnose at exterior corners.
E. Colors and Patterns: Refer to Schedules of Finishes, sheet A1.11.
2.03 BOND COAT
A. ANSI/TCNA A118.1 - Dry-Set Portland Cement Mortar.
B. ANSI/TCNA A118.4 - Latex Portland Cement Mortar.
2.04 SETTING BED MATERIALS
A. Portland Cement: ASTM C150, Type I.
B. Lime: ASTM C207, Type S.
C. Sand: ASTM C144.
D. Water: Potable.
2.05 GROUT
A. Grout: ANSI/TCNA A118.6, A118.7 – Factory-prepared cementitious type, dry polymer-modified. Un-sanded type for joints less than 1/8 inches and sanded type for joints 1/8 inches and greater. Colors as selected by Architect. Refer to Schedules of Finishes, sheet I1.00.

SECTION 09 30 13 TILE Continued

2.06 ACCESSORIES
A. Expanded Metal Lath: 3.4 lbs/sq.yd. galvanized laminated to Grade B, Type 1, Kraft Paper, by Western Metal Lath, La Mirada, CA, or equal as approved in accordance with Division 01, General Requirements for substitutions.
B. Curing Paper: Kraft paper conforming to ASTM C171.
C. Grout Sealer for Walls and Floors, cement.
1. Pro Spec Grout Sealer (acrylic), by Bonsal American Co, Charlotte, NC.
2. Grout Armor Color Sealer(acrylic), by Grout Armor, Fort Lauderdale, FL.
3. Acrylic Grout Sealer (acrylic), by Glaze 'N Seal.
D. Waterproofing Membrane at Vertical Surfaces: ASTM D4601, Type I asphalt saturated glass felt.
2.07 SETTING MORTARS
A. Scratch Coat For Walls: One part Portland cement, 1/2 part hydrated lime, 4 parts dry sand or 5 parts damp sand, or one part Portland cement, 3-parts dry sand or 4-parts damp sand.
B. Float or Leveling Coat For Walls: One part Portland cement, 1part hydrated lime, 6 parts dry sand or 7 parts damp sand.
C. Conform to Table 2103A.10, California Building Code.
D. Admixture: Mix in accordance with manufacturer's directions.
E. Consistency: When mixed with water, setting bed material shall be workable and allow maximum compaction during tamping.
F. Mixing: Thoroughly mix dry setting bed ingredients before adding water to obtain proper consistency. When machine mixing, add water first. Discard mix when it has reached its initial set.>
2.08 EXPANSION JOINT MATERIALS
A. Joint Sealer: ASTM C920
B. Vertical Joints: One part silicone sealant, non-sag, elongation movements 25/25 percent, Shore A, hardness range 20 -27, 860 Glaziers and Contractor Silicone Sealant
C. Manufactured by Pecora Corp., Harleysville, PA, or approved equal in accordance with Division 01, General Requirements for substitutions.
D. Color: to match grout color.
E. Primer: Non-staining type, recommended by sealant manufacturer to suit application.
F. Joint Cleaner: Non-corrosive and non-staining type, recommended by sealant manufacturer; compatible with joint forming materials.
G. Joint Backing: ASTM D1056; round, closed cell polyethylene foam rod; oversized 25 percent larger than joint width; DENVERFOAM or GREEN-ROD.
H. Bond Breaker: Pressure sensitive tape recommended by sealant manufacturer to suit application. Apply to bottom of joints that are too shallow to receive foam backer rod.

PART 3 - EXECUTION
3.01 EXAMINATION
A. Verify that surfaces are ready to receive work. Verify types of materials that may have been in contact with surfaces.
B. Beginning of installation means installer accepts condition of existing substrate.

3.02 PREPARATION
A. Protect surrounding work from damage or disfiguration.
B. Vacuum clean existing substrate and damp clean.
C. Seal substrate surface cracks with filler. Level existing substrate surfaces to acceptable flatness tolerances.
3.03 MIXING BOND COAT
A. Use brand of prepackaged dry mix specified by manufacturer.
B. Mixing: Mix dryset Portland-cement bond coat or latex Portland-cement bond coat in accordance with manufacturer's instructions.
C. Add dry bond coat mix to amount of latex specified by manufacturer and mix thoroughly to obtain complete and visually uniform wetting of dry bond coat mix. Slake for 15 minutes and remix before using.
D. Proper bond coat consistency is such that when applied with recommended notched trowel to backing, ridges formed in bond coat will not flow or slump.
E. During use, remix mortar occasionally. Additional water or fresh materials shall not be added after initial mixing. Mortar shall not be used after initial set.
3.04 INSTALLATION: SETTING BED AT WALLS
A. Install paper-backed metal lath in accordance with TCNA Handbook for Ceramic Tile Installation.
B. Install scratch and leveling coat for walls in accordance with TCNA Handbook for Ceramic Tile Installation.
C. Apply setting bed over surfaces to a minimum thickness of 3/4 inch.
D. Allow setting bed to cure in accordance with ANSI/TCNA A108.1.
E. Align wall tile grout with floor tile grout.>
3.05 BOND COAT APPLICATION
A. Clean surface thoroughly. Dampen if very dry, but do not saturate.
B. Apply bond coat with flat side of trowel over an area no greater than covered with tile while bond coat remains plastic.
C. Within ten minutes before applying tile and using a notched trowel of type recommended by bond coat manufacturer, comb bond coat obtain even setting bed without scraping backing material.
D. Cover surface uniformly with no bare spot, with sufficient bond coat to ensure a minimum bond coat thickness of 3/32 inch between tile and backing after tile has been beaten into place. Tile shall not be applied to skinned-over bond coat.
3.06 INSTALLATION OF TILE
A. Refer to mortar and latex manufacturers directions.
B. Do not soak tile.
C. Set tile firmly on bond coat over setting bed surfaces with minimum of 95 percent coverage at floors and wet areas. Back-butter ribbed tiles and other tiles in accordance with ANSI/TCNA 108.5. Spacers on tile determine joint width between tile. Strings or pegs may be used to space tile that have no spacers. Bring all surfaces to a true plane at proper position or elevation. Thoroughly beat-in all tile with a beating block while bond coat is still plastic. Beating shall fill minimum of 95 percent of entire space between units and setting bed. 80 percent coverage is permitted for walls in non-wet areas.
D. Lay tile to pattern indicated on Drawings or request tile pattern from Architect. Do not interrupt tile pattern through openings.
E. Place edge strips at exposed tile edges.
F. Cut and fit tile tight to penetrations through tile. Align floor, base and wall joints where floor tiles and wall tiles are same width.
G. Place tile joints uniform in width, subject to variance in tolerance allowed in tile size. Make joints watertight without voids, cracks, excess setting bed mix or excess grout. All inside corners shall be coved and exterior corners shall be bullnose. No butted 90 degree intersections permitted. All outside corners shall be bull nose.
H. Sound tile after setting. Replace hollow sounding units.
I. Keep expansion or control joints free of setting bed mix or grout. Apply sealant to joints.
J. Allow tile to set for a minimum of 16 hours prior to grouting.
K. Apply sealant to junction of tile and dissimilar materials and junction of dissimilar planes.
L. If tile is face-mounted, remove paper within one hour after tile is set and adjust all tiles that are out of line or level. Use no more water than necessary in removing paper.
M. Align wall tile grout with floor tile grout.
3.07 INSTALLATION OF GROUT
A. Remove bond coat from face and edges of tile.
B. Mixing: Refer to manufacturer's directions.
C. Dry blend contents of an entire container of grout prior to mixing with water or latex.
D. Use caution to prevent scratching or damaging tile surfaces.
E. Dampen dry joints prior to grouting. Do not leave puddles of water in joints before grouting.
F. Force maximum amount of grout into joints. Cushion edge tile shall be finished evenly to depth of cushion. Square-edge tile shall be finished flush with surface. Finished joint shall be uniform in color, smooth and without pinholes, voids or low spots.
G. Grout width: 1/8" unless noted otherwise on drawings.
3.08 CURING
A. Damp-Cure grout for a minimum of 72 hours. Remove and replace improperly cured grout.
B. Cover with 40-pound kraft paper.
C. Polyethylene curing membrane not permitted.
3.09 GROUT SEALING FOR PORTLAND CEMENT GROUTS
A. Floors: Apply grout sealer after curing, two coats required, throughout surface.
B. Wall: Seal wall and grout, 2 coats required, install per manufacturer's instructions.
C. Verify that grout is dry, clean and properly cured. Ensure grout has been installed minimum of 10 days prior to sealing.
D. Apply undiluted sealer to grout joints in accordance with manufacturer's instructions and recommendations. Maintain abundance of sealer on joint until porosity has been satisfied.
E. Thoroughly remove excess material; allow to dry, minimum 24 hours prior to use.
F. Remove excess sealer that has dried on tile surface.
3.10 EXPANSION JOINTS
A. Install joints maximum 12 feet oc each direction or as indicated. Install expansion joints over any cold joint, control joint, expansion joint, at juncture of floors and walls, changes in material at other restraining surfaces such as curbs, columns, bases, and wall corners and where recommended by TCNA EJ171-07.
B. Expansion joint shall penetrate full depth of setting bed.
C. Do not damage waterproofing membrane.
D. Install sealant in accordance with manufacturer's instructions, using hand pointing tools.
E. Measure joint dimensions and size materials to achieve required width/depth ratios. Minimum width: 3/8 inch.
F. Install joint backing to achieve a neck dimension no greater than 1/3 joint width. Concrete shall be fully cured.
G. Install bond breaker where joint backing is not used. Install removable masking material to maintain clean lines and protect adjoining surfaces.
H. Apply sealant within recommended application temperature ranges. Consult manufacturer when sealant cannot be applied within these temperature ranges. Do no install sealant on wet or damp surfaces.
I. Install sealant free of air pockets, foreign embedded matter, ridges and sags.
J. Tool joints concave, channel shaped or as detailed. Use slicking agent type recommended by manufacturer.
3.11 EDGE STRIP
A. Install according to manufacturer's recommended procedures.
3.12 CLEANING
A. Clean tile work and adjacent surfaces.
3.13 PROTECTION
A. Protect finished installation.
B. Do not permit traffic over finished floor surface.
3.14 REPLACEMENT OF MATERIALS
A. Provide three percent additional tile and trim shape of each type, color, pattern and size used in Work for Owner's use in replacement and maintenance. Package securely to prevent damage and label clearly.

END OF SECTION

SECTION 09 90 00 - PAINTING

A. SECTION INCLUDES
1. Surface preparation.
2. Prime coat application.
3. Finish coat application.
B. SUBMITTALS
1. Provide product data on all finishing products.
2. Three samples 8-1/2 by 11 inches in size illustrating range of colors and textures available for each surface-finishing product scheduled for selection.
3. Manufacturer's application instructions.
C. MANUFACTURERS
1. Products of following manufacturers form basis for design and quality intended.
a. Dunn-Edwards Corporation, Los Angeles, CA.
b. Sherwin-Williams Company, Cleveland, OH.
c. Kelly-Moore Paints.
d. Glidden Professional, Strongsville, OH
e. Vista Paint, Fullerton, CA
D. MATERIALS
1. Coatings: Ready mixed, except field-catalyzed coatings. Process pigments to soft paste consistency, capable of being readily and uniformly dispersed to homogeneous coating.
2. Colors and Glosses: Architect will select color and hue to be used in various types of paint specified and will be sole judge of acceptability of various glosses obtained from materials proposed to be used in Work. During actual painting, Architect may make minor modifications in tone and shade to adjust for actual surface and lighting conditions encountered.
3. Undercoats and Thinners: Provide undercoat paint produced by same manufacturer as finish coat. Use only thinners recommended by paint manufacturer and use only to recommended limits. Use undercoat, finish coat and thinner material as parts of a unified system of paint finish.
4. Coatings: Good flow and brushing properties; capable of drying or curing free of streaks or sags.
5. Accessory Materials: Linseed oil, shellac, turpentine, paint thinners and other materials not specifically indicated but required to achieve the finishes specified of commercial quality.
E. MATERIALS PREPARATION
1. Mix and prepare painting material in accordance with manufacturer's recommendations.
F. EXECUTION
1. Verify that surfaces are ready to receive Work as instructed by the product manufacturer.
2. Examine surfaces scheduled to be finished prior to commencement of Work. Report any condition that may potentially affect proper application.
3. Measure moisture content of new surfaces using an electronic moisture meter. Apply finishes only when moisture content of surfaces are below the following maximums. Conduct moisture measurements in presence of the project inspector, document readings and submit to Architect under Part 1.
a. Gypsum Wallboard: 12 percent.
b. Interior Located Wood: 15 percent, measured in accordance with ASTM D4442 and ASTM D4444.
4. Beginning installation means acceptance of existing surfaces and conditions.
5. Remove electrical plates, hardware, light fixture trim and fittings prior to preparing surfaces for finishing.
6. Correct minor defects and clean surfaces which surfaces which affect Work of this section.
7. Shellac and seal marks that may bleed through surface finishes.
8. Gypsum Board Surfaces: Fill minor defects, joints and nail head depressions with spackling compounds. Prime in accordance with primer manufacturer's recommendations. Apply primer over skim coat for Level 5 finish.
9. Wood Scheduled to Receive Paint Finish: Remove, dust, grit and foreign matter. Seal knots, pitch streaks and sappy sections. Fill nail holes with tinted exterior caulking compound after prime coat has been applied.
10. Previously Coated Surfaces: Painting over existing painted surfaces interior and exterior, ascertain that new paint system is compatible with existing gloss and high-gloss oil based paint system to insure proper adhesion. Sand lightly existing paint and prime walls as scheduled.
11. Protect elements surrounding the Work of this Section from damage or disfiguration.
12. Repair damage to other surfaces caused by Work of this Section.
13. Furnish drop cloths, shields and protective methods to prevent spray or droppings from disfiguring other surfaces.
14. Apply products in accordance with manufacturer's instructions.
15. Do not apply finishes to surfaces that are not dry.
16. Apply each coat to uniform finish. Number of coats specified is a minimum. Additional coats shall be applied at no extra cost, if coatings show evidence of uneven application, uneven pigmentation, brush strokes or otherwise unsatisfactory distribution of material.
17. Under coats shall be lighter and brighter in tint than finish coat.
18. Sand lightly between coats to achieve required finish.
19. Allow applied coat to dry before next coat is applied.
20. Where clear finishes are required, tint fillers to match wood. Work fillers into the grain before set. Wipe excess from surface.
21. Prime back surfaces of interior and exterior woodwork with primer paint.
22. Prime back surfaces of interior woodwork scheduled to receive stain or varnish finish with gloss varnish reduced 25 percent with mineral spirits.
23. Seal Tops, bottoms and cutouts for hardware and accessories of wood doors and plastic-laminate covered doors.
24. Paint Frames: Split paint door frames to match color of walls on each side of opening unless directed otherwise by Architect.
25. Exterior and interior walls shall receive 10% accent paint colors.
26. Exterior fascia, trims, reveals, and ornamental fences and gates shall receive accent paint colors different from field paint color.
27. Paint finish shall continue through behind all wall-mounted items (e.g. markerboards, chalk and tack boards).
G. CLEANING: As Work proceeds, promptly remove paint where spilled, splashed, or spattered.
H. SCHEDULE: INTERIOR SURFACES

	Vista	Behr	Dunn Edwards	Sherwin Williams	Kelly Moore	PPG
A. Gypsum Board - Semi-Gloss - Acrylic (Skim Coat required for Level 5 finish)						
1. Primer, 1 Coat	1100	73	W101V	B28W400	971	1000
2. Finish, 2 Coats	5400	370	W7500	B31W200	1650	1407V

END OF SECTION

SECTION 13 10 10 BULLET RESISTANT PARTITIONS AND EQUIPMENT

PART 1 GENERAL
1.1 SECTION INCLUDES
A. Bullet Resistant Transparencies.
1.2 RELATED SECTIONS
A. Section 08 41 13 Storefronts
b. Section 08 81 00 - Glass.
1.3 REFERENCES
A. ASTM A 666 - Standard Specification for Annealed or Cold-Worked Austenitic Stainless Steel Sheet, Strip, Plate and Flat Bar.
B. ASTM B 209/B 209M - Standard Specification for Aluminum and Aluminum-Alloy Sheet and Plate.
C. NIJ Standard 0108.01 - (National Institute of Justice) Standard for Ballistic Resistant Protective Materials.
D. Underwriters Laboratories: UL 752 - Standard for Bullet Resisting Equipment.
E. ASTM C1172 - Standard Specification for Laminated Architectural Flat Glass.
F. ASTM B 221 - Standard Specification for Aluminum and Aluminum-Alloy Extruded Bars, Rods, Wire, Profiles, and Tubes.
1.4 PERFORMANCE REQUIREMENTS
A. Design, fabricate and install all partition materials specified in this section to meet or exceed the requirements of UL 752.
1.5 SUBMITTALS
A. Submit under provisions of Section 01 33 00.
B. Product Data: Manufacturer's data sheets on each product to be used, including:
1. Preparation instructions and recommendations.
2. Storage and handling requirements and recommendations.
3. Installation methods.
C. Shop Drawings: Submit Manufacturer approved shop drawings detailing plan, section and elevation views as necessary to ensure proper field installation procedures. Coordinate locations with those listed in the Contract Drawings.
D. Selection Samples: For each finish product specified, two complete sets of color chips representing manufacturer's full range of available colors and patterns.
E. Verification Samples: For each finish product specified, two samples, minimum size 6 inches (150 mm) square, representing actual product, color, and patterns.
1.6 QUALITY ASSURANCE
A. Manufacturer Qualifications: All primary products specified in this section will be supplied by a single manufacturer with a minimum of ten (10) years experience.
B. Installer Qualifications: All products listed in this section are to be installed by a single installer with a minimum of five (5) years demonstrated experience in installing products of the same type and scope as specified.
1.7 DELIVERY, STORAGE, AND HANDLING
A. Store products in manufacturer's unopened packaging until ready for installation.
B. Store and dispose of hazardous materials, and materials contaminated by hazardous materials, in accordance with requirements of local authorities having jurisdiction.
1.8 PROJECT CONDITIONS
A. Maintain environmental conditions (temperature, humidity, and ventilation) within limits recommended by manufacturer for optimum results. Do not install products under environmental conditions outside manufacturer's recommended limits.
1.9 WARRANTY
A. At project closeout, provide to Owner or Owner's Representative an executed copy of the manufacturer's standard limited warranty against manufacturing defect, outlining its terms, conditions, and exclusions from coverage.
PART 2 PRODUCTS
2.1 MANUFACTURERS
A. Acceptable Manufacturer: Total Security Solutions, which is located at: 935 Garden Ln.; Fowlerville, MI 48836; Toll Free Tel: 866-304-5070; Fax: 517-223-0805; Email:request info (info@tssbulletproof.com); Web:https://tssbulletproof.com/?utm_source=arcat&utm_medium=referral&utm_campaign=digital-outbound
B. Requests for substitutions will be considered in accordance with provisions of Section 01 35 00.
2.2 BULLET RESISTANT TRANSPARENCIES
A. Scope: Bullet-resistant barrier system which maintains an open environment. For use in applications where optical quality, cleanability and long term performance are important.
B. Aluminum Framing System. Non-Rated head, sill and jambs are two piece extrusions with no integral weep system at the sill, extrusions to allow for re-glazing with the use of removable stops. All joints and connections shall be tight, providing hairline joints and true alignment of adjacent members. Glazing must not be removalble from the threat side of the sash. Provide to dimension heights and widths indicated on the Drawings.
1. System shall be designed to accept glazing from 1.25" to 1.375" thick
2. Fiberglass Filler in all mullions.
B. Glazing: Meets Underwriters Laboratories Standard 752 for bullet resistance and/or tested by H.P. White Laboratory for specified bullet resistance.
1. Glazing Type: Monolithic acrylic.
2. Glazing Thickness: 1.25 inches (31.7mm).
3. Rating: UL Level 1 (Confirm with Owner prior to installation).
4. Vertical Butt Joints.
PART 3 EXECUTION
3.1 EXAMINATION
A. Do not begin installation until substrates have been properly prepared.
B. If substrate preparation is the responsibility of another installer, notify Architect of unsatisfactory preparation before proceeding.
3.2 PREPARATION
A. Clean surfaces thoroughly prior to installation.
B. Prepare surfaces using the methods recommended by the manufacturer for achieving the best result for the substrate under the project conditions.
3.3 INSTALLATION
A. Install in accordance with manufacturer's instructions.
3.4 PROTECTION
A. Protect installed products until completion of project.
B. Touch-up, repair or replace damaged products before Substantial Completion.

END OF SECTION

City of Los Banos
At the Crossroads of California
520 "J" Street
Los Banos, California 93635

HUBER & HUBER Architects

10796 N. TEA PARTY LN
FRESNO, CA 93730-5920
ANN HUBER: 559.470.7721
KEITH HUBER: 559.304.3015

LICENSED ARCHITECT
ANN BENNETT HUBER
C24520
REN 03-31-21
STATE OF CALIFORNIA

■ Project Number:
1001006

■ ISSUE:

No.	Issued	Date	No.	Issued	Date

■ Agency Approval:

■ Client & Project Address:
LOS BANOS CITY HALL
LOS BANOS CITY HALL
520 "J" ST.
LOS BANOS, CA 93635

■ Project:
LOS BANOS CITY HALL ADA COUNTERS

■ Sheet Title:
SPECIFICATIONS

CONSTRUCTION DOCUMENTS

■ Fac No: ■ Bldg No: N/A
■ Date: 10/6/2020 ■ Client Project No: N/A

Sheet:
G0.13

If the sheet is not 30"x42", it is a reduced print. Scale Accordingly.

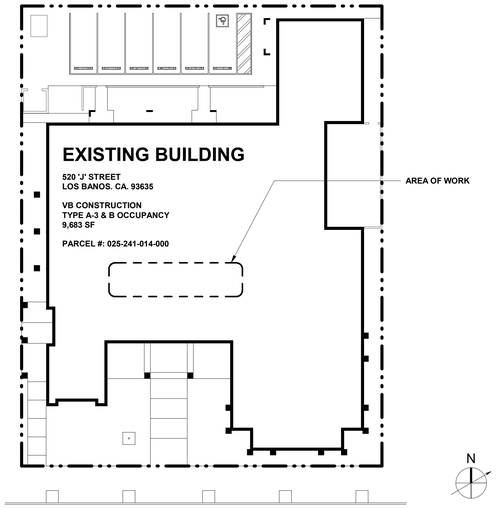

SITE PLAN 6
1" = 20'-0"

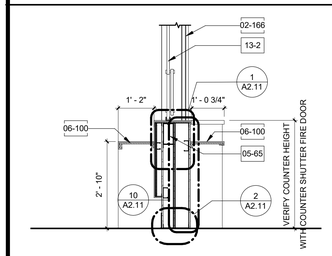

SECTION - ADA COUNTER 10
1/2" = 1'-0"

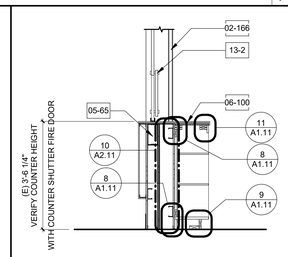

SECTION - STANDING COUNTER 7
1/2" = 1'-0"

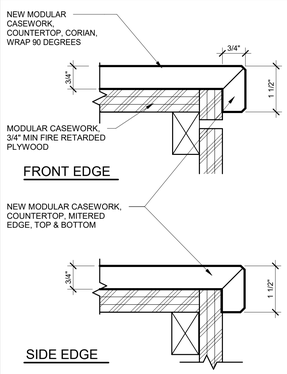

CASEWORK, COUNTERTOP, SOLID STOCK EDGES 11
6" = 1'-0"

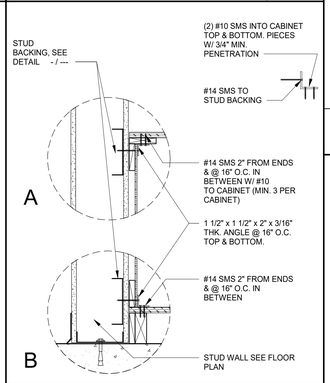

TYPICAL CASEWORK CONNECTION 8
1 1/2" = 1'-0"

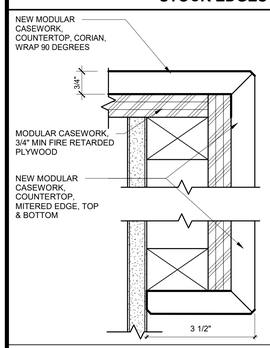

CASEWORK, COUNTERTOP, SOLID STOCK EDGES PATRON SIDE 12
6" = 1'-0"

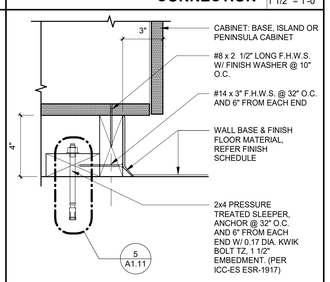

NOTE: AT ISLAND OR PENINSULA USE 3/8" DIA. KWIK BOLT TZ W/ 2" MIN. EMBEDMENT INTO CONCRETE AT 18" O.C. MAX. (PER ICC-ES ESR-1917)

TYPICAL CASEWORK BASE ANCHORAGE 9
3" = 1'-0"

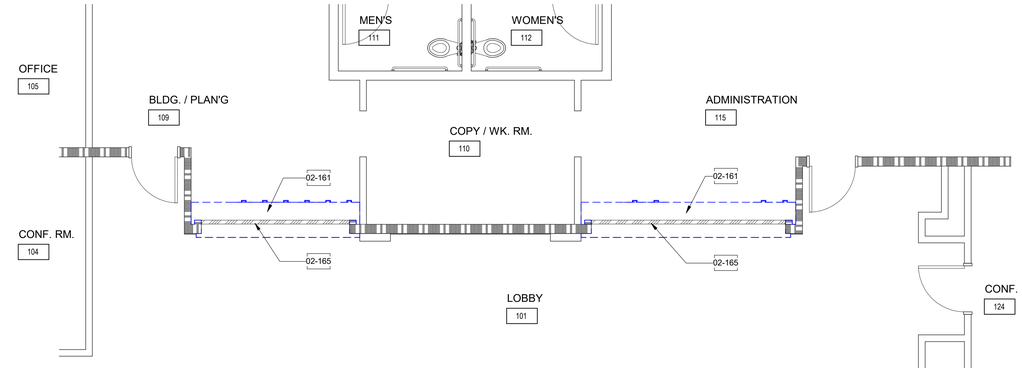

PARTIAL DEMO REMODEL PLAN 1
1/4" = 1'-0"

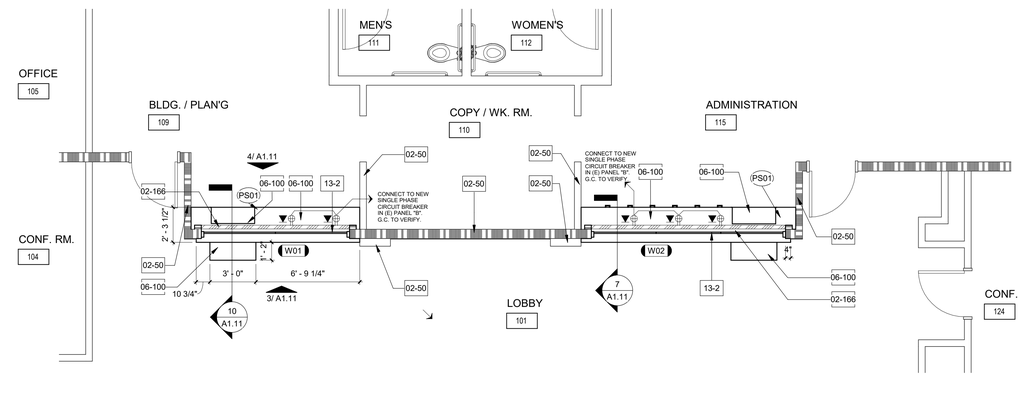

PARTIAL REMODEL FLOOR PLAN 2
1/4" = 1'-0"

IN CONCRETE FLOORS

1. EXPANSION ANCHORS SHALL BE HILTI KWIK BOLT TZ AS MANUFACTURED BY HILTI, INC., 5400 SOUTH 122ND EAST AVENUE, TULSA, OKLAHOMA 74146. INSTALLATION SHALL BE IN ACCORDANCE WITH THE MANUFACTURER'S RECOMMENDATIONS AND I.C.C. REPORT NO. ESR-1917.
2. ULTIMATE TENSION VALUES SHALL BE AS FOLLOWS:

BOLT SIZE	MIN. EMBED.	EDGE DIST.	SPACING	CONC. THICKNESS	TENSION LOAD	TORQUE TEST
3/8"	2"	4 1/2"	5"	4"	1600 #	25 # -FT.
1/2"	3 1/4"	7 3/4"	6"	6"	3475 #	40 # -FT.

3. PLACEMENT GUIDELINES FOR ABOVE VALUES IN ITEM 2 REQUIRE THE FOLLOWING CONDITIONS:
   - TABLE VALUES ARE BASED ON f'_c = 3000 PSI
   - HOLES DRILLED WITH A HAMMER DRILL AND CARBIDE BIT COMPLYING W/ ANSI B212.15-1994
   - BIT DIAMETER EQUALS THE SIZE OF THE ANCHOR BEING INSTALLED
   - HOLE DEPTH MUST EXCEED MIN. EMBED BY ONE BOLT DIAMETER
   - ANY SEISMIC DESIGN CATEGORY PER 2019 C.B.C.
   - TENSION LOAD VALUES SHALL BE MULTIPLIED BY 0.6 FOR LIGHTWEIGHT CONCRETE (FOR O.S.H.P.D. PROJECTS, MULTIPLY BY 0.45)
   - A.C.I. "CRACKED' CONCRETE CONDITION IS SUFFICIENT
   - FOR CARBON OR STAINLESS STEEL BOLTS
4. WHEN INSTALLING EXPANSION ANCHORS IN EXISTING CONCRETE, USE CARE AND CAUTION TO AVOID CUTTING OR DAMAGING THE EXISTING REINFORCING BARS. MAINTAIN A MINIMUM CLEARANCE OF ONE-INCH BETWEEN THE EXISTING REINFORCEMENT AND THE EXPANSION ANCHOR.
5. ANY BOLTS SHOWN ON THE APPROVED PLANS AS EXPANSION ANCHORS, REQUIRES SPECIAL INSPECTION IN ACCORDANCE WITH SECTION 4.4 IN THE I.C.C. REPORT. SPECIAL INSPECTION SHALL BE BY AN APPROVED TESTING AND INSPECTION AGENCY. ANY ITEMS THAT REQUIRE EXPANSION ANCHORS BUT ARE NOT SPECIFIC ALLY SHOWN ON THE APPROVED PLANS MUST BE APPROVED BY THE STRUCTURAL ENGINEER AND AGENCY PRIOR TO INSTALLATION.

HILTI KWIK BOLT TZ ON CONCRETE FLOOR 5
1/8" = 1'-0"

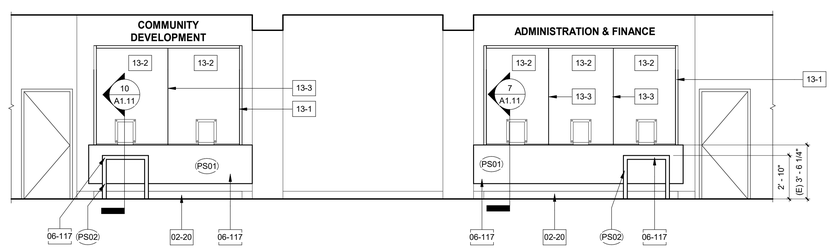

INTERIOR ELEVATION 3
1/4" = 1'-0"

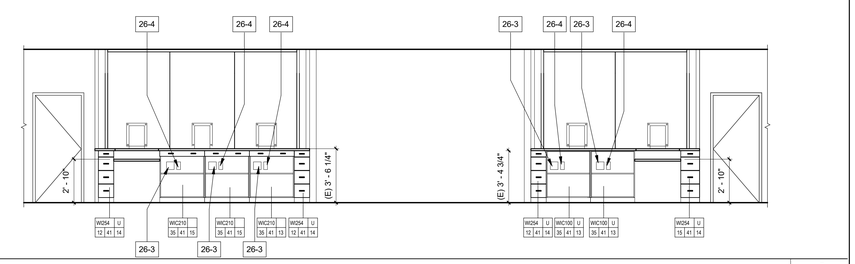

INTERIOR ELEVATION 4
1/4" = 1'-0"

LEGEND

SYMBOL	DESCRIPTION
	1-HOUR FIRE BARRIER - 1HR RATED METAL STUD WALL ASSEMBLY WITH 45 MIN DOOR.
	EXISTING WALL TO REMAIN
PL01	a. MANUFACTURER: WILSONART b. NAME: COLOMBIAN WALNUT c. FINISH: #12 SOFTGRAIN d. NUMBER:7943K
PS01	a. MANUFACTURER: DUPONT CORIAN b. NAME: HAZELNUT c. SIZE: 12MM HORIZONTAL 6MM VERTICAL
PS02	a. MANUFACTURER: DUPONT CORIAN b. NAME: WITCH HAZELNUT c. SIZE: 12MM HORIZONTAL 6MM VERTICAL

KEYNOTES

NO.	Note - Detail
02-20	SELECTIVE DEMOLITION, (E) TILE BASE TO BE CAREFULLY REMOVED AND REINSTALLED
02-50	(E) WALL, TO REMAIN- PROTECT FROM SELECTIVE DEMOLITION
02-161	SELECTIVE DEMOLITION, (E) CASEWORK TO BE REMOVED.
02-166	SELECTIVE DEMOLITION, (E) FIRE COUNTER SHUTTER DOOR TO REMAIN, PROTECT FROM SELECTIVE DEMO
05-65	05-60 COLD FORMED METAL FRAMING, LIGHT GAGE COLD FORMED STEEL, BOX HEADER FROM 2-400T150-43 & 2-800S162-43. STITCH TOGETHER W/ #8 SMS @ 12" OC TO FLANGES.
06-100	SOLID POLYMER FABRICATIONS, NEW COUNTERTOP, SOLID SURFACE.
06-117	CASEWORK, SOLID SURFACING
13-1	BULLET RESISTANT PARTITIONS AND EQUIPMENT, FRAME, NON-RATED, FIBERGLASS FILLED
13-2	BULLET RESISTANT PARTITIONS AND EQUIPMENT, GLASS, 1 1/4" UNCOATED ACRYLIC
13-3	BULLET RESISTANT PARTITIONS AND EQUIPMENT, GLASS, BUTT JOINT
26-3	ELECTRICAL, OUTLET, QUAD
26-4	ELECTRICAL, OUTLET, DUAL DATA

GENERAL NOTES

1. CUT (E) GYP BD FINISH ON PROJECT SIDE ONLY AS REQUIRED FOR WORK. PATCH TO MATCH (E).
2. PATCH AND REFINISH (E) CONSTRUCTION OUTSIDE OF PROJECT AREA IMPACTED BY THE NEW WORK.
3. RESTORE INTEGRITY OF RATED ASSEMBLY AT THE END OF EACH CONSTRUCTION SHIFT
4. ALL FINISHES TO MATCH EXISTING. UNLESS INDICATED OTHERWISE BY FACILITY.

GENERAL DEMO NOTES

1. FULLY COORDINATE CONSTRUCTION SEQUENCING WITH OWNER'S REPRESENTATIVE. SUBMIT CONSTRUCTION SEQUENCING SCHEDULE FOR APPROVAL BY OWNER PRIOR TO START OF CONSTRUCTION.
2. (E) ROUTES OF EGRESS MUST BE MAINTAINED AT ALL TIMES DURING CONSTRUCTION.
3. PRIOR TO CONSTRUCTION, PROVIDE DUSTPROOF, NON COMBUSTIBLE, TEMPORARY CONSTRUCTION BARRIER TO PREVENT DUST TRANSMISSION FROM PROJECT AREA AT ALL TIMES. AT END OF CONSTRUCTION, IF REQUIRED, PATCH TO MATCH (E) AREA OF ATTACHEMENT OF BARRIER.
4. SALVAGE ALL EQUIPMENT TO BE REMOVED. COORDINATE WITH OWNER. ALL SALVAGED ITEMS SHALL REMAIN THE PROPERTY OF THE OWNER. UNLESS DIRECTED OTHERWISE BY OWNER'S REPRESENTATIVE.
5. INSPECT CONDITION OF (E) WALLS AND SLABS PRIOR TO CONSTRUCTION TO IDENTIFY NON-COMPLIANT PENETRATIONS OR CONDITIONS.
6. ALL FIRE-PROOFING OF EXISTING STRUCTURAL MEMBERS SHALL BE RESTORED TO MATCH (E) ASSEMBLY IF DAMAGED BY CONSTRUCTION OPERATIONS.
7. IDENTIFY AND CONFIRM ALL CONDUITS AND CABLING RUNS THAT ENTERS INTO, PASSES THROUGH PENETRATES OR TERMINATES INTO AREA OF WORK.
8. AT BEGINNING OF PROJECT PRIOR TO ANY DEMOLITION WORK INVOLVING THE 1-HR CORRIDOR OR 1-HR SMOKE BARRIER, PROVIDE DUSTPROOF, NON-COMBUSTIBLE, TEMPORARY CONSTRUCTION BARRIERS TO UNDERSIDE OF (E) STRUCTURE TO PREVENT DUST TRANSMISSION INTO ADJOINING ROOMS AND TO MAINTAIN (E) FIRE AND SMOKE PROTECTION BARRIERS AT ALL TIMES. FINISH AND PAINT CORRIDOR SIDE. REMOVE TEMPORARY BARRIER WHEN NO LONGER REQUIRED BY CONSTRUCTION OPERATIONS.
9. LOCATION OF CONSTRUCTION BARRIERS AND ACCESS DOORS HAVE NOT BEEN INDICATED AND ARE AT THE CONTRACTOR'S DISCRETION WITH OWNER'S APPROVAL. ALL DOORS IN TEMPORARY BARRIERS SHALL BE TIGHT FITTING, 20 MIN. RATED DOORS IN HOLLOW METAL FRAMES WITH SMOKE SEALS, PROVIDE LOCKABLE HARDWARE OPERABLE FROM THE CONSTRUCTION SIDE WITHOUT SPECIAL KNOWLEDGE OR EFFORT.
10. RESTORE FINISHES DAMAGED DURING INSTALLATION AND CONSTRUCTION PERIOD SO NO EVIDENCE REMAINS OF CORRECTION WORK.

City of Los Banos
At the Crossroads of California
520 'J' Street
Los Banos, California 93635

HUBER & HUBER Architects
10796 N. TEA PARTY LN
FRESNO, CA. 93730-5920
ANN HUBER: 559.470.7721
KEITH HUBER: 559.304.3015

LICENSED ARCHITECT ANN BENNETT HUBER C24520 REN. 03-31-2021 STATE OF CALIFORNIA

Project Number: 1001006

ISSUE:

No.	Issued	Date	No.	Issued	Date

Agency Approval:

Client & Project Address:
LOS BANOS CITY HALL
LOS BANOS CITY HALL
520 'J' ST.
LOS BANOS, CA 93635

Project:
LOS BANOS CITY HALL ADA COUNTERS

Sheet Title:
FLOOR PLAN, INTERIOR ELEVATIONS, SITE PLAN AND DETAILS

CONSTRUCTION DOCUMENTS

Fac No: 10670 | Bldg No: N/A
Date: 10/6/2020 | Client Project No: N/A
Sheet:

A1.11

Please Recycle

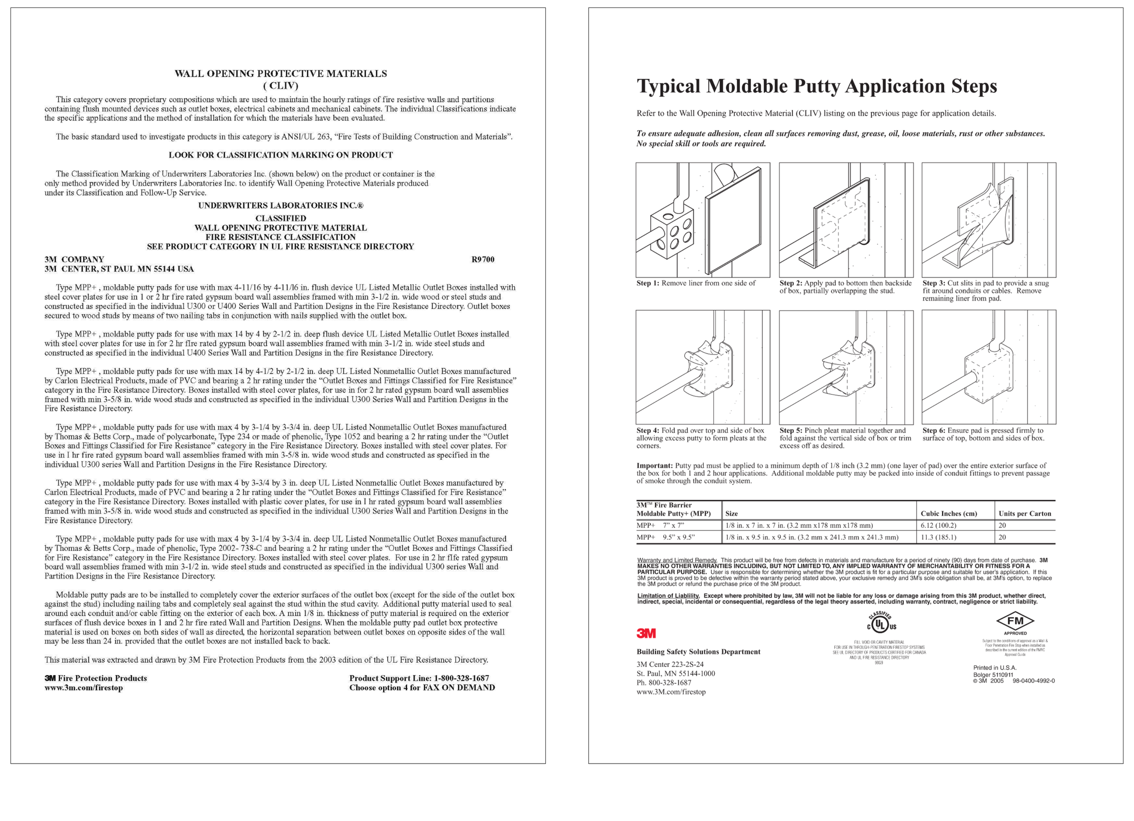

FIRE MOLDABLE PUTTY PAD DETAIL 9
12" = 1'-0"

May 18, 2005

Design No. BW-S-0007

Assembly Ratings – 1 and 2 Hr (See Item 2)
L Rating at Ambient – Less Than 1 CFM/lin ft
L Rating at 400° F – Less Than 1 CFM/lin ft
Joint Width – 1 in. Max

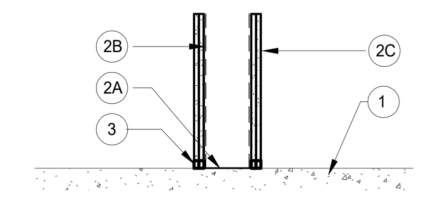

1. **Floor Assembly** – Min 4-1/2 in. (114 mm) thick reinforced lightweight or normal weight (100-150 pcf or 1600-2400 kg/m3) structural concrete. Floor may also be constructed of any 6 in. (152 mm) thick UL Classified hollow-core **Precast Concrete Units***.
See **Precast Concrete Units** category in the Fire Resistance Directory for names of manufacturers.

2. **Wall Assembly** – The 1 or 2 h fire-rated gypsum board/steel stud wall assembly shall be constructed of the materials and in the manner specified in the individual U400 or V400 Series Wall or Partition Design in the UL Fire Resistance Directory. In addition, the wall may incorporate a head-of-wall joint system constructed as specified in the HW Series Joint Systems in the UL Fire Resistance Directory. The wall shall include the following construction features:

   A. Steel Floor Runner – Floor runners of wall assembly shall consist of min No. 25 gauge galv steel channels sized to accommodate steel studs (Item 2C). Floor runners to be provided with min 1-1/4 in. (32 mm) flanges. Runners secured with steel fasteners spaced 12 in. (305 mm) OC.

   B. Studs – Steel studs to be min 3-1/2 in. wide. (89 mm) Studs cut 1/2 to 3/4 in. (13 to 19 mm) less in length than assembly height with bottom nesting in, resting on and fastened to floor runner with sheet metal screws. Stud spacing not to exceed 24 in. (610 mm) OC.

   C. Gypsum Board* – Gypsum board installed to a min total thickness of 5/8 or 1-1/4 in. (16 or 32 mm) on each side of wall for a 1 or 2 hr rated wall, respectively. Wall to be constructed as specified in the individual U400 or V400 Series Design in the UL Fire Resistance Directory, except that a max 1 in. (25 mm) gap shall be maintained between the bottom of gypsum board and top of concrete floor.
   The hourly fire rating of the joint system is equal to the hourly fire rating of the wall.

3. **Fill, Void or Cavity Material* – Caulk or Sealant** – Max separation between top of floor and bottom of gypsum board is 1 in. (25 mm). Min 5/8 in. (16 mm) thickness of fill material installed on each side of the wall between the bottom of the gypsum board and the top of the concrete floor, flush with each surface of the wall.

3M COMPANY – FB1000 NS, FB-2000, FB-2000+, FB-3000 WT sealant, FireDam 150+, IC 15WB+, CP 25WB+ caulk
*Bearing the UL Classification Mark

BASE OF WALL UL DESIGN U438 6
3/4" = 1'-0"

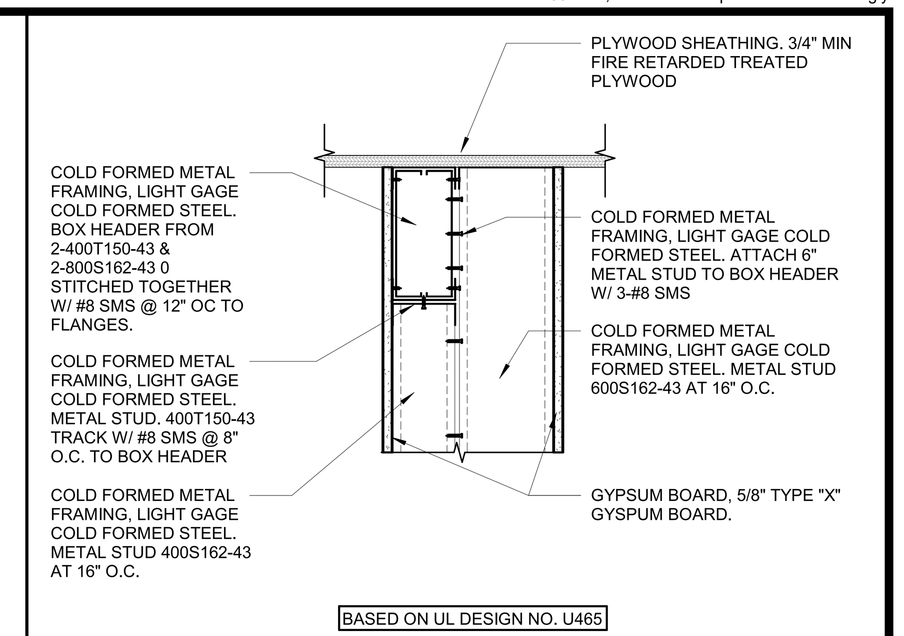

BOX HEADER AT SILL 1
1 1/2" = 1'-0"

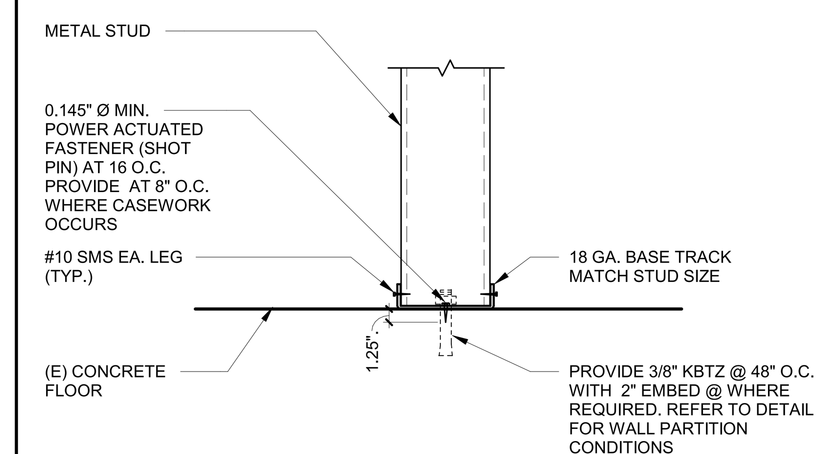

METAL FRAMING - STUD BASE TRACK 2
1 1/2" = 1'-0"

Design No. U465
July 17, 2015

Nonbearing Wall Rating - 1 HR.

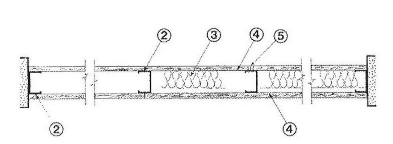

*** Indicates such products shall bear the UL or cUL Certification Mark for jurisdictions employing the UL or cUL Certification (such as Canada), respectively.**

1. **Floor and Ceiling Runners -** (not shown) - Channel shaped runners, 3-5/8 in. deep (min), 1-1/4 in. legs, formed from min No. 25 MSG galv steel, attached to floor and ceiling with fasteners spaced 24 in. OC. max.

1A. **Framing Members* - Floor and Ceiling Runners -** (Not shown) - As and alternate to item 1 - Channel shaped, min 3-5/8 in. deep, attached to floor and ceiling with fasteners 24 in. OC max.
SCAFCO STEEL STUD MANUFACTURING CO - Type SUPREME Framing System
STEEL CONSTRUCTION SYSTEMS INC - Type SUPREME Framing System
UNITED METAL PRODUCTS INC - Type SUPREME Framing System

1B. **Framing Members* - Floor and Ceiling Runners -** (Not shown) - In lieu of Item 1 - For use with Item 2B, proprietary channel shaped runners, 1-1/4 in. wide by min 3-5/8 in. deep fabricated from min 0.020 in. thick galv steel, attached to floor and ceiling with fasteners spaced 24 in. OC max.
CALIFORNIA EXPANDED METAL PRODUCTS CO B- Viper20™ Track
CRACO MFG INC - SmartTrack20™

1C. **Floor and Ceiling Runners -** (Not shown) - For use with Item 2C- Channel shaped, fabricated from min 20 MSG corrosion- protected or gal steel, min depth to accommodate stud size, with min 1 in. long legs, attached to floor and ceiling with fasteners spaced 24 in. OC max.

1D. **Framing Members* - Floor and Ceiling Runners-** (Not shown) - In lieu of Items 1 through 1C - for use with Item 2D and 4G only, proprietary channel shaped runners, 1-1/4 in. deep by min 3-5/8 in. wide fabricated from min 0.018 in. thick galv steel, attached to floor and ceiling with fasteners spaced 24 in. OC max.
CLARKDIETRICH BUILDING SYSTEMS - CD ProTRAK
MBA METAL FRAMING - ProTRAK
RAM SALES L L C - Ram ProTRAK

2. **Steel Studs -** Channel shaped, 3-5/8 in. Deep (min), formed from min No. 25 MSG galv steel spaced 24 in. OC max. Studs to be cut 3/4 in. less than assembly height.

2A. **Framing Members* - Steel Studs -** As an alternate to Item 2 - Channel shaped studs, min 3-5/8 in. deep, spaced a max of 24 in. OC. Studs to be cut 3/4 in. less than assembly height.
SCAFCO STEEL STUD MANUFACTURING CO - Type SUPREME Framing System
STEEL CONSTRUCTION SYSTEMS INC - Type SUPREME Framing System
UNITED METAL PRODUCTS INC - Type SUPREME Framing System

2B. **Framing Members* - Steel Studs -** (Not Shown) In lieu of Item 2 - For use with Item 1B, proprietary channel shaped steel studs, 1-1/4 in. wide by min 3-5/8 in. deep fabricated from min 0.020 in. thick galv steel. Studs cut 3/4 in. less in length than assembly height.
CALIFORNIA EXPANDED METAL PRODUCTS CO - Viper20™
CRACO MFG INC - SmartStud20™

2C. **Steel Studs -** (As an alternate to item 2, for use with Item 4E) Channel shaped, fabricated from min 20 MSG corrosion-protected or galv steel, 3-1/2 in. min depth, spaced a max of 16 in. OC. Studs friction-fit into floor and ceiling runners. Studs to be cut 5/8 to 3/4 in. less than assembly height.

2D. **Framing Members* - Steel Studs-** As an alternate to items 2 through 2C - For use with Item 1D and 4G only, channel shaped studs, min 3-5/8 in. wide fabricated from min. 0/018 in. thick galv steel, spaced a max of 24 in. OC. Studs to be cut 1/2 in. less than assembly height.
CLARKDIETRICH BUILDING SYSTEMS - CD ProSTUD
MBA METAL FRAMING - ProSTUD
RAM SALES L L C - Ram ProSTUD
STEEL STRUCTURAL PRODUCTS L L C - Tri-S ProSTUD

3. **Batts and Blankets* -** (Optional) - Mineral wool or glass fiber batts partially or completely filling stud cavity.
See **Batts and Blankets** (BZJZ) category for names of Classified companies

3A. **Fiber, Sprayed* -** As an alternate to Batts and Blankets (Item 3) - (100% Borate Formulation) - Spray applied cellulose material. The fiber is applied with water to completely fill the enclosed cavity in accordance with the application instructions supplied with the product with a nominal dry density of 2.7 lb/ft³. Alternate Application Method: The fiber is applied without water or adhesive at a nominal dry density of 3.5 lb/ft³, in accordance with the application instructions supplied with the product.
U S GREENFIBER L L C - INS735 & INS745 for use with wet or dry application. INS765LC and INS770LD are to be used for dry application only.

4. **Gypsum Board* -** 5/8 in. thick, 4 ft wide, attached to steel studs and floor and ceiling track with 1 in. long, Type S steel screws spaced 8 in. OC along edges of board and 12 in. OC in the field of the board. Joints oriented vertically and staggered on opposite sides of the assembly. When attached to item 6 (resilient channels) or 6A, 6B or 6C (furring channels), gypsum board is screw attached to furring channels with 1 in. long, Type S steel screws spaced 12 in. apart.
AMERICAN GYPSUM CO - Types AC-C, AGX-1, M-Glass
CERTAINTEED GYPSUM INC - Types 1, EGRG, GlasRoc, Type X, Type X-1, Type C, SilentFX, 5/8" Easi-Lite Type X.
CONTINENTAL BUILDING PRODUCTS OPERATING CO, L L C - Types LGCF2A, LGFC6A, LGFC-C/A, LGFC-WD, LGLLX
NATIONAL GYPSUM CO - Types eXP-C, FSK, FSK-C, FSMR-C, FSW-C, FSW-G, FSW, FSW-3, FSW-5, FSW-6, FSW-8, FSL.
UNITED STATES GYPSUM CO - Type AR, C, FRX-G, IP-AR, IP-x1, IP-X2, IPC-AR, SCX, SHX, WRC, WRX, USGX (Joint tape and compound, Item S, optional for use with Type USGX)

5. **Joint Tape and Compound -** Vinyl, dry or premixed joint compound, applied in two coats to joints and screw heads; paper tape, 2 in. wide, embedded in first layer of compound over all joints. As an alternate, nominal 3/32 in. thick gypsum veneer plaster may be applied to the entire surface of Classified veneer baseboard. Joints reinforced. Paper tape and joint compound may be omitted when gypsum boards are supplied with square edges.

6. **Resilient Channel -** (Optional- Not Shown) - 25 MSG galv steel resilient channels spaced vertically max 24 in. OC, flange portion attached to each intersecting stud with 1/2 in. long type S-12 pan head screws. May not be used with Item 4F or 4J.

6A. **Steel Framing Members (Not Shown)* -** As an alternate to Item 6, furring channels and resilient sound isolation clip as described below:
a. **Furring channels -** Formed of No. 25 MSG galv steel. 2-9/16 in. or 2-23/32 in. wide by 7/8 in. deep, spaced 24 in. OC perpendicular to studs. Channels secured to studs as described in Item b. Ends of adjoining channels are overlapped 6 in. and tied together with double strand of No. 18 SWG galv steel wire near each end of overlap. As an alternate, ends of adjoining channels may be overlapped 6 in. and secured together with two self-tapping No.6 framing screws, min 7/16 in. long at the midpoint of the overlap, with one screw on each flange of the channel.
b. **Framing Members* -** Used to attach furring channels (Item a) to studs (Item 2). Clips spaced 48 in. OC, and secured to studs with 1-5/8 in. wafer or hex head Type S steel screw through the center grommet. Furring channels are friction fitted into clips. RSIC-1 clip for use with 2-9/16 in. wide furring channels. RSIC-1 (2.75) chip for use with 2-23/32 in. wide furring channels.
PAC INTERNATIONAL INC - Types RSIC-1, RSIC-1 (2.75).

7. **Wall and Partition Facings and Accessories* -** (Optional, Not shown) - Nominal 1/2 in. thick, 4 ft wide panels, for optional use as an additional layer on one or both sides of the assembly. Panels attached in accordance with manufacturer's recommendations. When the QR-510 panel is installed between the steel framing and the UL Classified gypsum board, the required UL Classified gypsum board layer(s) is/are to be installed as indicated as to fastener type and spacing, except that the required fastener length shall be increased by a minimum of 1/2 in. Not evaluated or intended as a substitute for the required layer(s) of UL Classified Gypsum Board.
PABCO BUILDING PRODUCTS L L C, DBA PABCO GYPSUM - Type QuietRock QR-510

*** Indicates such products shall bear the UL or cUL Certification Mark for jurisdictions employing the UL or cUL Certification (such as Canada), respectively.**

WALL UL DESIGN NO U465 10
1/8" = 1'-0"

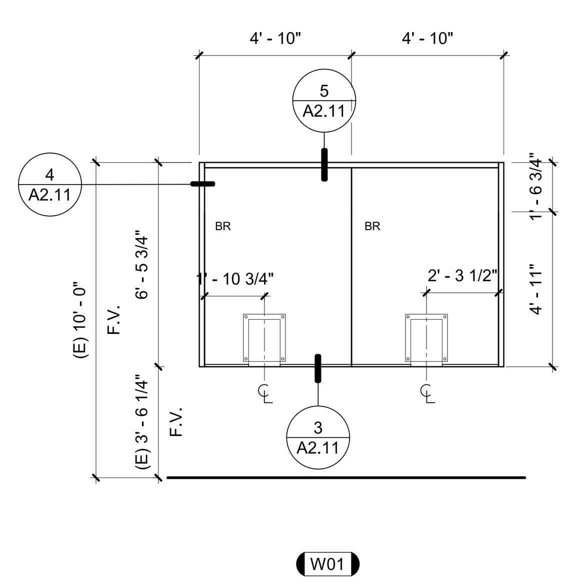

- ALUMINUM FRAME
- BR - UL LEVEL (CONFIRM LEVEL WITH OWNER PRIOR TO INSTALLATION) BALLISTIC RESISTANT GLAZING AT LOWER PANELS.
- T - CLEAR TEMPERED GLAZING CLASS II (GLASS PANEL ≥ 9 SQ. FT.)(ONLY AT TOP PANEL. OPTIONAL. CLIENT TO CONFIRM.
- FACTORY FINISH OR CLEAR ANODIZED

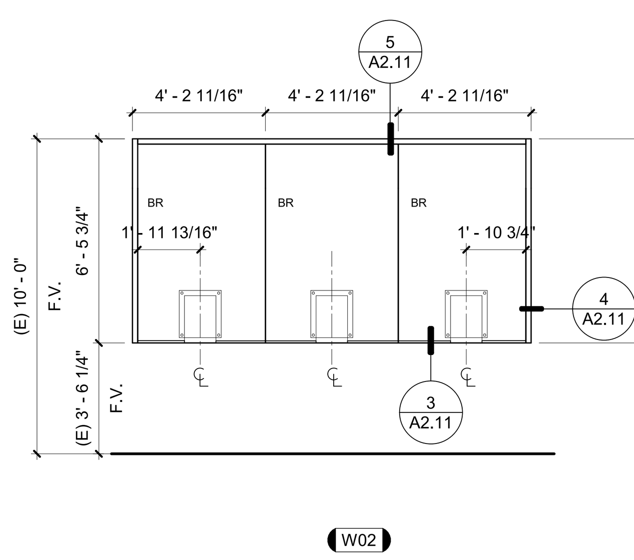

- ALUMINUM FRAME
- BR - UL LEVEL (CONFIRM LEVEL WITH OWNER PRIOR TO INSTALLATION) BALLISTIC RESISTANT GLAZING AT LOWER PANELS.
- T - CLEAR TEMPERED GLAZING CLASS II (GLASS PANEL ≥ 9 SQ. FT.)(ONLY AT TOP PANEL. OPTIONAL. CLIENT TO CONFIRM.
- FACTORY FINISH OR CLEAR ANODIZED

WINDOW TYPES 7
1/4" = 1'-0"

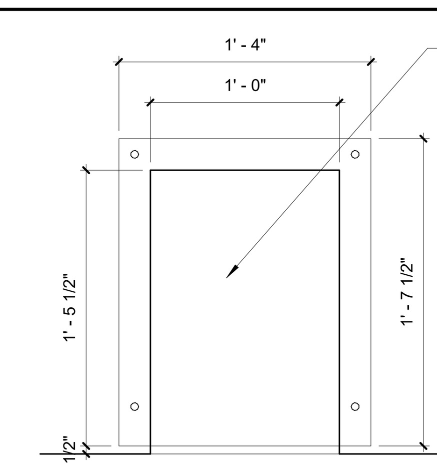

WINDOW SYSTEM CONSISTS OF CUSTOM PREFABRICATED BULLET RESISTANT PANELS WITH SECURE AIR PASSAGE AS REQUIRED FOR VOICE TRANSMISSION. ALUMINUM FRAME, WITH A PLASTIC LAMINATE BASE. FINISH PER OWNER.

CHECK WITH MANUFACTURER FOR ACCESSORIES AND SPECIFICATIONS.

BULLET RESISTANT PARTITIONS AND EQUIPMENT - TRANSACTION WINDOW 8
1 1/2" = 1'-0"

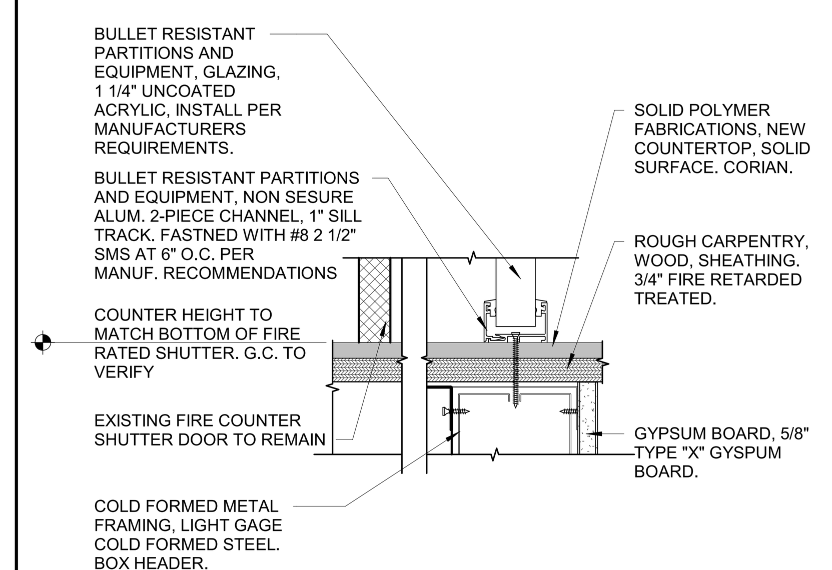

BULLET RESISTANT PARTITIONS AND EQUIPMENT - SILL 3
3" = 1'-0"

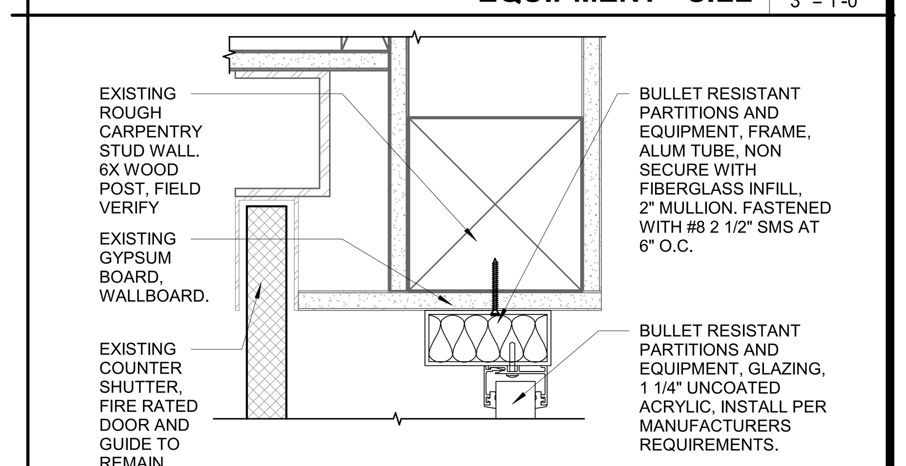

BULLET RESISTANT PARTITIONS AND EQUIPMENT- JAM 4
3" = 1'-0"

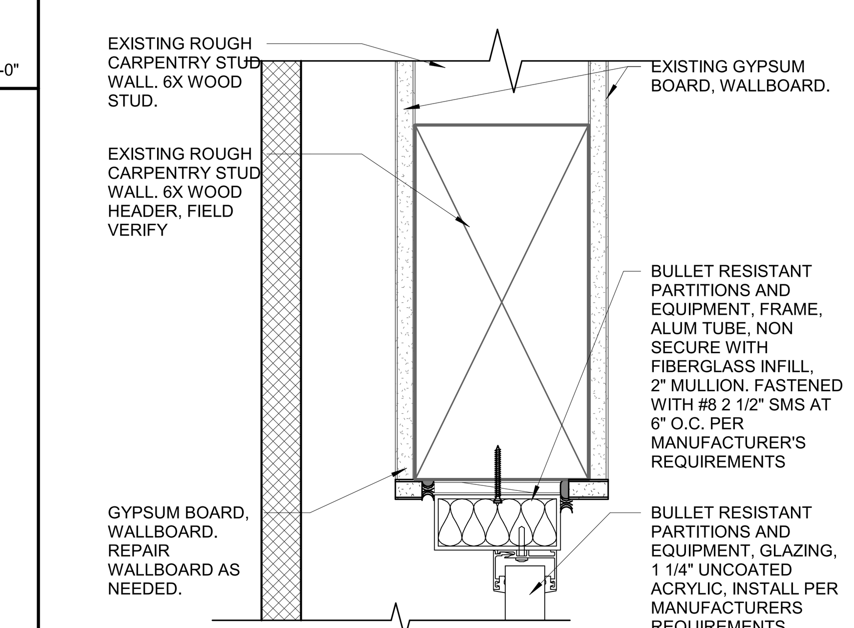

BULLET RESISTANT PARTITIONS AND EQUIPMENT - HEAD 5
3" = 1'-0"

City of Los Banos
At the Crossroads of California

520 'J' Street
Los Banos, California 93635

HUBER & HUBER Architects

10796 N. TEA PARTY LN
FRESNO, CA 93730-5920
ANN HUBER: 559.470.7721
KEITH HUBER: 559.304.3015

LICENSED ARCHITECT ANN BENNETT HUBER C24520 REN 03-31-21 STATE OF CALIFORNIA

Project Number: [redacted]
1001006

ISSUE:

No.	Issued	Date	No.	Issued	Date

Agency Approval:

Client & Project Address:
LOS BANOS CITY HALL
LOS BANOS CITY HALL
520 'J' ST.
LOS BANOS, CA 93635

Project:
LOS BANOS CITY HALL ADA COUNTERS

Sheet Title:
DETAILS

CONSTRUCTION DOCUMENTS

Fac No: | Bldg No: N/A
Date: 10/6/2020 | Client Project No: N/A

Sheet:
A2.11