No. _____

Contract Documents for Construction of Place Road and San Luis Street Storm Drain and Detention Basin

---

City of Los Banos

VOLUME 2 of 2

April 2011

AECOM

1120 West "I" Street, Suite C Los Banos, California 93635

CITY OF LOS BANOS

CONSTRUCTION DOCUMENTS FOR:

SAN LUIS AND PLACE ROAD STORMDRAIN PIPELINE AND BASIN

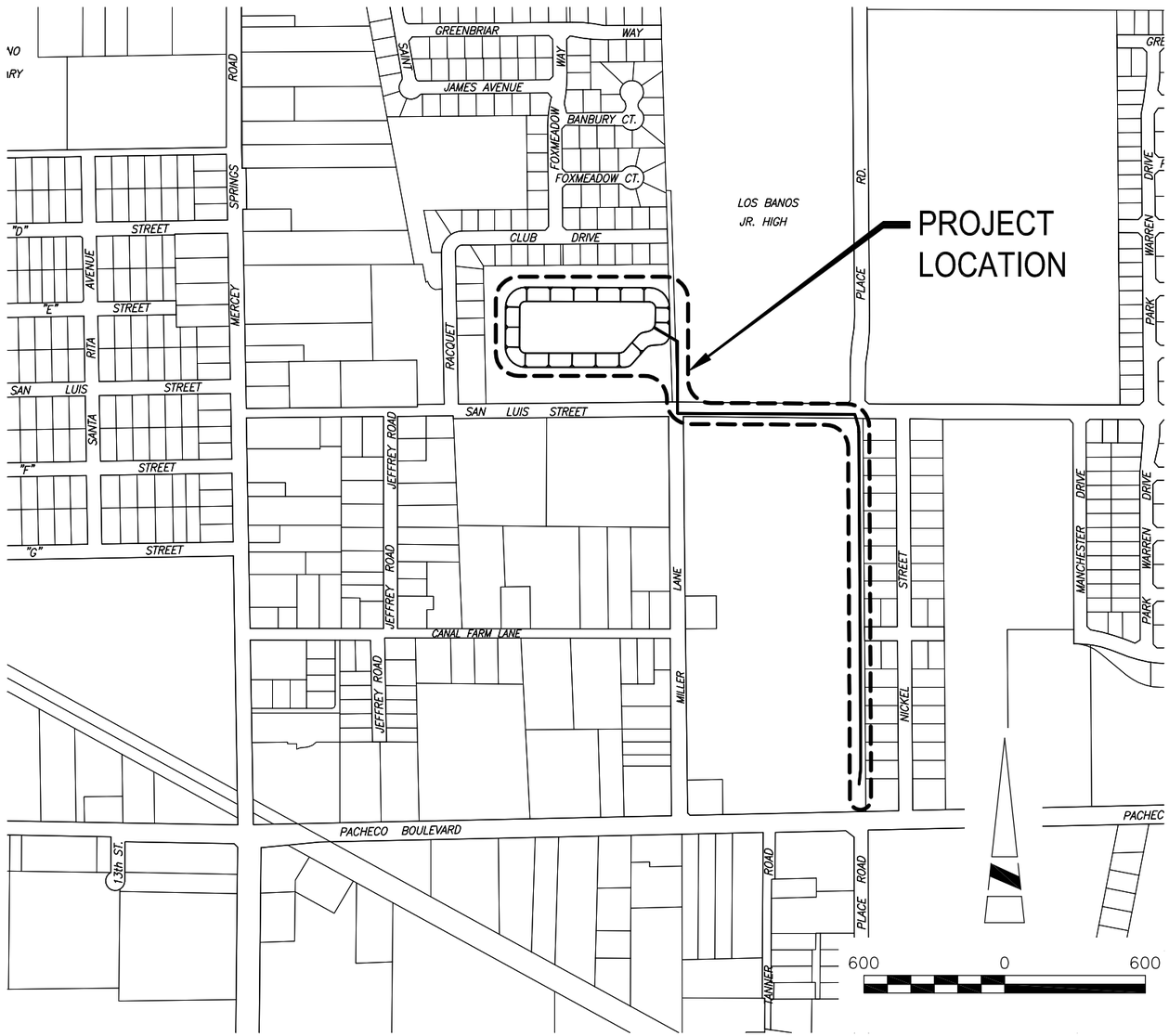

DRAWING LIST

DRAWING	SHEET No.	DESCRIPTION
G-101	1	LOCATION MAP & DRAWING LIST
G-102	2	LEGEND, ABBREVIATIONS & GENERAL NOTES
C-101	3	PLAN & PROFILE - STA. 10+00 TO STA. 17+00
C-102	4	PLAN & PROFILE - STA. 17+00 TO STA. 24+00
C-103	5	PLAN & PROFILE - STA. 24+00 TO STA. 31+00
C-104	6	PLAN & PROFILE - STA. 31+00 TO STA. 37+43.30
C-105	7	PLAN & PROFILE - INLET AND OUTLET PUMP STATION
C-106	8	EXISTING PARK TOPOGRAPHY
C-107	9	BASIN DEMOLITION PLAN
C-108	10	BASIN PLAN
C-109	11	SITE AND GRADING PLAN FOR PUMP STRUCTURE
C-110	12	GRADING AND DRAINAGE PLAN FOR HORSESHOE PITS AND PLAYGROUND AREA
C-111	13	PIPE BACKFILL DETAILS
C-112	14	STORMDRAIN MANHOLES
C-113	15	MISCELLANEOUS DETAILS
C-114	16	MISCELLANEOUS DETAILS
S-101	17	PUMP STRUCTURE
S-102	18	PUMP STRUCTURE MISCELLANEOUS DETAILS
S-103	19	INLET/OUTLET STRUCTURE
L-101	20	LAYOUT PLAN
L-102	21	LAYOUT PLAN
L-103	22	LAYOUT PLAN
L-104	23	LAYOUT PLAN
L-105	24	IRRIGATION PLAN
L-106	25	IRRIGATION PLAN
L-107	26	IRRIGATION PLAN
L-108	27	IRRIGATION PLAN
L-109	28	IRRIGATION SCHEDULE
L-110	29	PLANTING PLAN
L-111	30	PLANTING PLAN
L-112	31	PLANTING PLAN
L-113	32	PLANTING PLAN
L-114	33	DETAILS
L-115	34	DETAILS
L-116	35	DETAILS
L-117	36	DETAILS
L-118	37	DETAILS
L-119	38	DETAILS
L-120	39	DETAILS
L-121	40	DETAILS
L-122	41	DETAILS

CALL BEFORE YOU DIG
USA
800-642-2444

REGISTERED PROFESSIONAL ENGINEER
GARY W. ROGERS
No. 32121
CIVIL
STATE OF CALIFORNIA

MARK	DATE	MADE BY	CHECKED	DESCRIPTION

REVISIONS

AECOM
AECOM
1120 WEST "T" STREET, SUITE C
LOS BANOS, CALIFORNIA 93635
T: 209.826.5155
F: 209.826.3307
www.aecom.com

CITY OF LOS BANOS
SAN LUIS AND PLACE ROAD
STORMDRAIN PIPELINE AND BASIN
LOCATION MAP & DRAWING LIST

PROJECT NO:	60188586
CAD DWG FILE:	G-101
DESIGNED BY:	G.W.R.
DRAWN BY:	D.M.M.
DEPT CHECK:	G.W.R.
PROJ CHECK:	
DATE:	5/6/2011
SCALE:	AS SHOWN

G-101

SHEET 1 OF 41

PATH/FILENAME: \\USLBS1FP001\DATA\PROJECTS\GLB\60188586-SAN_LUIS_PLACE_SD\400-TECHNICAL\406-CIVIL\001\CAD\PLAN_SET\G-101.DWG
LAST UPDATE: Thursday, May 05, 2011 11:41:37 AM
PLOT DATE: Friday, May 06, 2011 9:56:36 AM
ANSI D - 5-May-11

LEGEND & ABBREVIATIONS

	EXISTING STORM DRAIN MANHOLE
	EXISTING SANITARY SEWER MANHOLE
	EXISTING WATER VALVE
	EXISTING UTILITY POLE W/GUYWIRE
	EXISTING STREET LIGHT
	EXISTING SIGN
	EXISTING TREE
	EXISTING FENCE LINE
× EL=109.76	EXISTING SPOT ELEVATION
NG	NATURAL GROUND
EP	EDGE OF PAVEMENT
BW	BACK OF WALK
℄	CENTERLINE
TC	TOP OF CURB
SS	SANITARY SEWER
SD	STORMDRAIN
MH	MANHOLE
CIPP	CAST IN PLACE PIPE
	EXISTING FIRE HYDRANT
GV	GATE VALVE
FH	FIRE HYDRANT
ACP	ASBESTOS CEMENT PIPE
CIPP	CAST IN PLACE PIPE
DI	DUCTILE IRON
PVC	POLY VINYL CHLORIDE
DIA	DIAMETER
	PROPOSED MANHOLE
INV. EL=99.20	PROPOSED ELEVATION
—— D ——	10-INCH PVC

BENCHMARK

STAINLESS STEEL ROD IN FIVE INCH MONUMENT CAP, 76 FEET EAST OF DRIVEWAY TO RANCH LOS BANOS MOBILE HOME PARK, 22 FEET SOUTH OF THE CENTERLINE OF EASTBOUND LANES OF STATE ROUTE 152, PACHECO BLVD., THREE FEET EAST OF A UTILITY POLE AND 1 FOOT NORTH OF A WITNESS POST AND FENCE. ELEV=108.52 FEET, DATUM NAVD 88 ADJUSTED IN JUNE 1991, NGS PID HS5145

REGISTERED PROFESSIONAL ENGINEER
GARY W. ROGERS
No. 32121
CIVIL
STATE OF CALIFORNIA

MARK	DATE	MADE BY	CHECKED	DESCRIPTION

REVISIONS

AECOM
AECOM
1120 WEST "I" STREET, SUITE C
LOS BANOS, CALIFORNIA 93635
T: 209.826.5155
F: 209.826.3307
www.aecom.com

CITY OF LOS BANOS
SAN LUIS AND PLACE ROAD
STORMDRAIN PIPELINE AND BASIN
LEGEND, ABBREVIATIONS & GENERAL NOTES

PROJECT NO:	60188586
CAD DWG FILE:	G-102
DESIGNED BY:	G.W.R.
DRAWN BY:	D.M.M.
DEPT CHECK:	G.W.R.
PROJ CHECK:	
DATE:	5/9/2011
SCALE:	AS SHOWN

G-102

PATH/FILENAME: \\VIDLER1FP001\DATA\PROJECTS\CLIENT\60188586-SAN_LUIS_PLACE_SD\400-TECHNICAL\408-CIVIL\001\CAD\PLAN_SET\G-102.DWG
LAST UPDATE: Friday, May 06, 2011 9:59:14 AM PLOT DATE: Monday, May 09, 2011 1:32:56 PM
ANSI D – 6-May-11

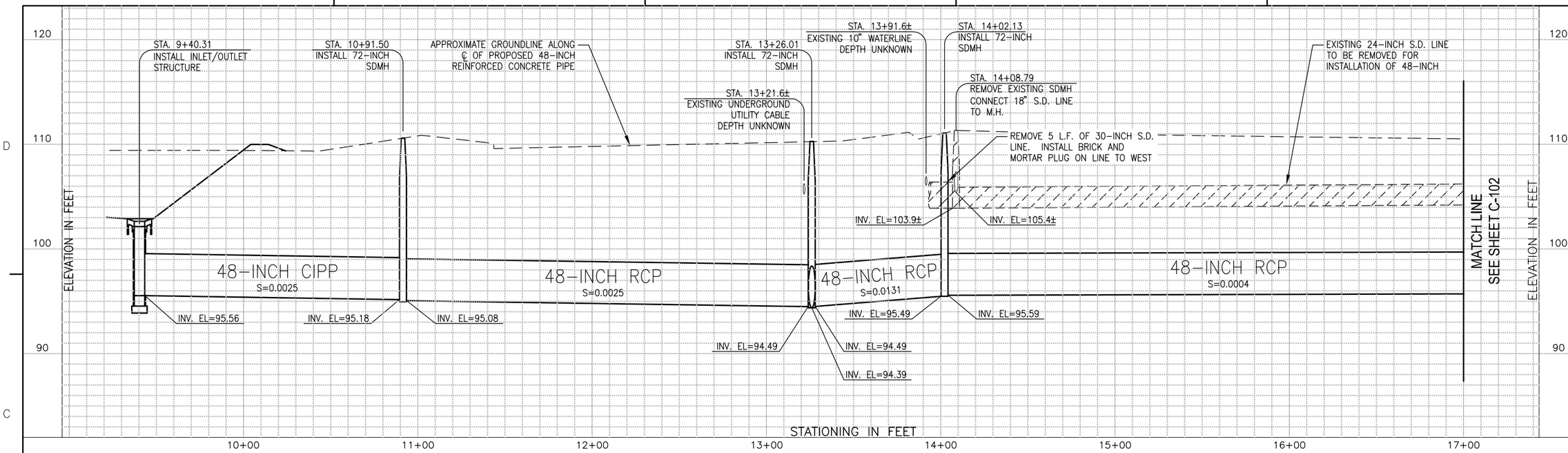

CONSTRUCTION NOTES

1. CONNECT EXISTING 18-INCH DIAMETER PVC S.D. LINE TO M.H. AT STA. 14+02.13 BY CUTTING LINE APPROXIMATELY 16 FEET SOUTH OF 48-INCH LINE, INSTALLING 22 1/2° ELBOW ON END OF LINE AND INSTALLING NEW 18-INCH PVC PIPE TO M.H.

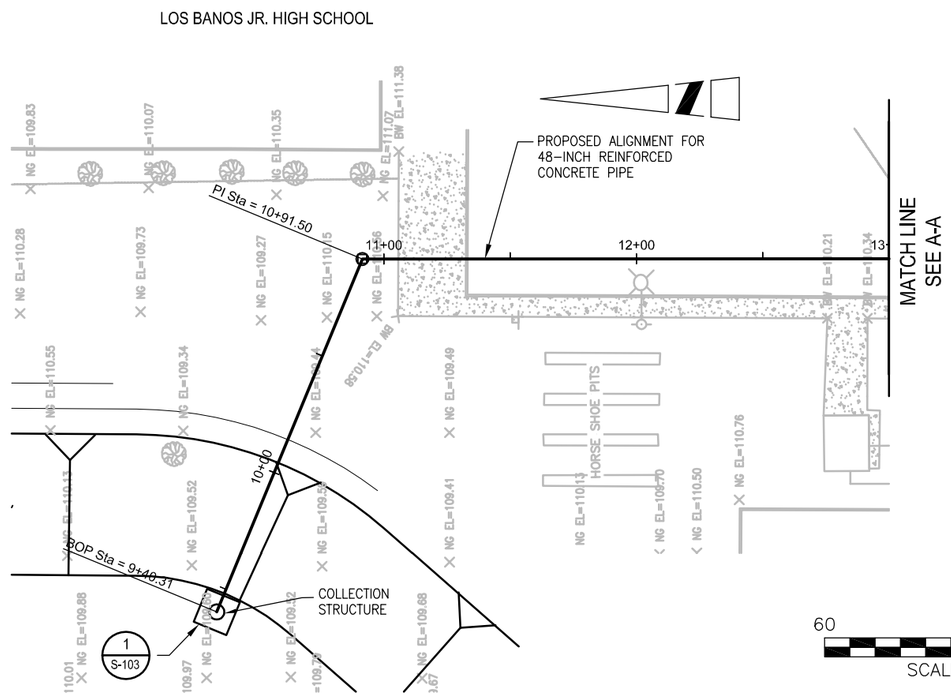

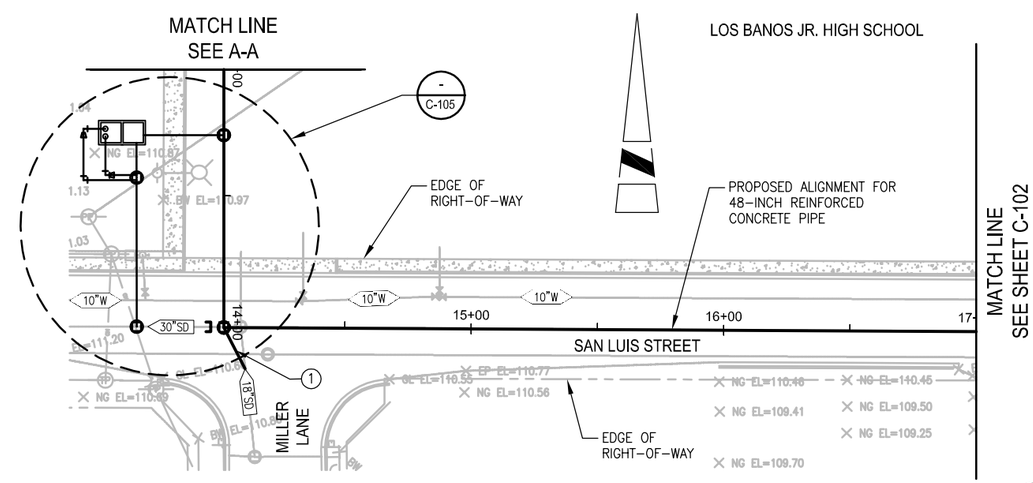

60 0 60
SCALE IN FEET

REGISTERED PROFESSIONAL ENGINEER
GARY W. ROGERS
No. 32121
CIVIL
STATE OF CALIFORNIA

MARK	DATE	MADE BY	CHECKED	DESCRIPTION

REVISIONS

AECOM
AECOM
1120 WEST "I" STREET, SUITE C
LOS BANOS, CALIFORNIA 93635
T: 209.826.5155
F: 209.826.3307
www.aecom.com

CITY OF LOS BANOS
SAN LUIS AND PLACE ROAD
STORMDRAIN PIPELINE AND BASIN
PLAN & PROFILE
STA. 10+00 TO STA. 17+00

PROJECT NO:	60188586
CAD DWG FILE:	C-101
DESIGNED BY:	G.W.R.
DRAWN BY:	D.M.M.
DEPT CHECK:	G.W.R.
PROJ CHECK:	
DATE:	5/6/2011
SCALE:	AS SHOWN

C-101
SHEET 3 OF 41

PATH/FILENAME: \\US.SEC1FP001\DATA\PROJECTS\CLIB\60188586-SAN_LUIS_PLACE_SD\400-TECHNICAL\406-CIVIL\001\CAD\PLAN_SET\C-101.DWG
PLOT DATE: Friday, May 06, 2011 9:59:54 AM
LAST UPDATE: Friday, May 06, 2011 7:02:18 AM
ANSI D – 6-May-11

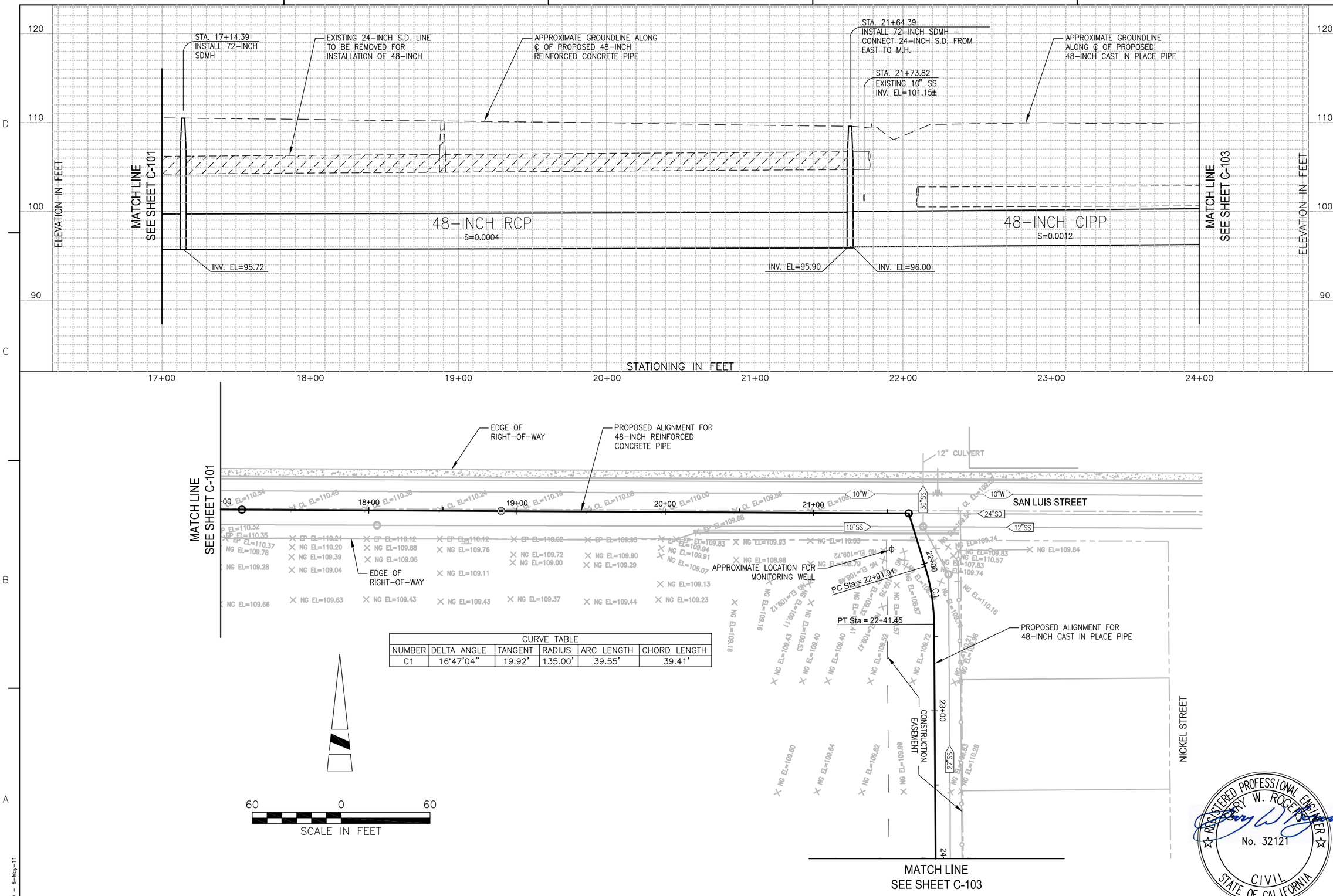

CURVE TABLE					
NUMBER	DELTA ANGLE	TANGENT	RADIUS	ARC LENGTH	CHORD LENGTH
C1	16°47'04"	19.92'	135.00'	39.55'	39.41'

REGISTERED PROFESSIONAL ENGINEER
GARY W. ROGERS
No. 32121
CIVIL
STATE OF CALIFORNIA

MARK	DATE	MADE BY	CHECKED	DESCRIPTION

REVISIONS

AECOM

AECOM
1120 WEST "I" STREET, SUITE C
LOS BANOS, CALIFORNIA 93635
T: 209.826.5155
F: 209.826.3307
www.aecom.com

CITY OF LOS BANOS
SAN LUIS AND PLACE ROAD
STORMDRAIN PIPELINE AND BASIN
PLAN & PROFILE
STA. 17+00 TO STA. 24+00

PROJECT NO:	60188586
CAD DWG FILE:	C-102
DESIGNED BY:	G.W.R.
DRAWN BY:	D.M.M.
DEPT CHECK:	
PROJ CHECK:	
DATE:	5/6/2011
SCALE:	AS SHOWN

C-102

SHEET 4 OF 41

PATH/FILENAME: \\VISUES1FP001\DATA\PROJECTS\CLB\60188586-SAN_LUIS_PLACE_SD\400-TECHNICAL\416-CIVIL\001\CAD\PLAN_SET\C-102.DWG
LAST UPDATE: Friday, May 06, 2011 7:06:28 AM PLOT DATE: Friday, May 06, 2011 10:01:13 AM

ANSI D – 6-May-11

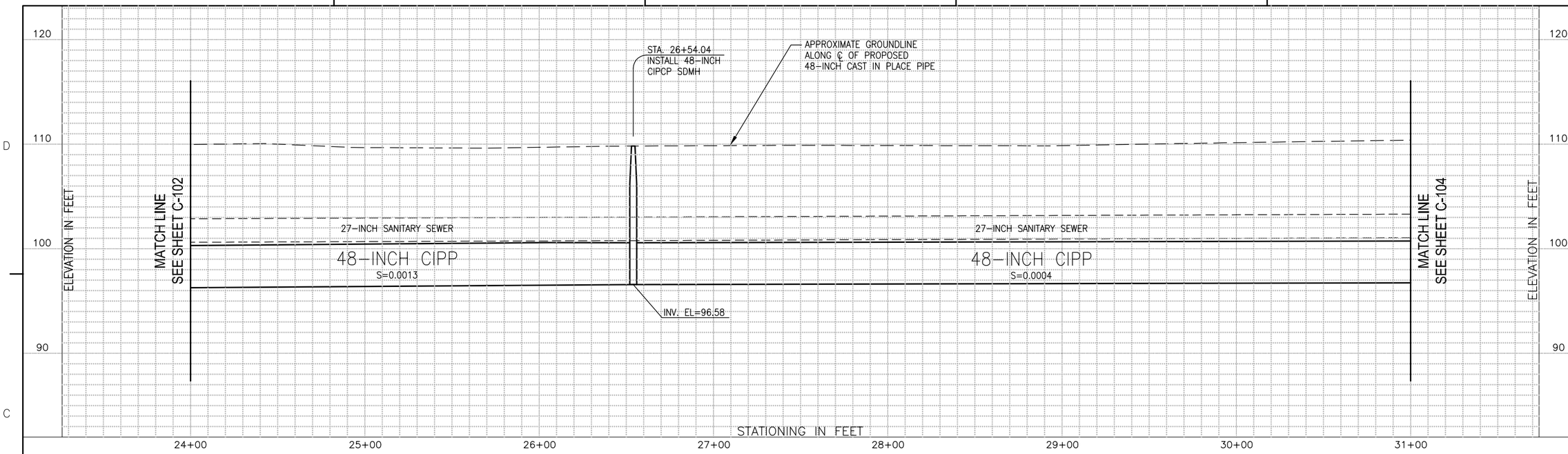

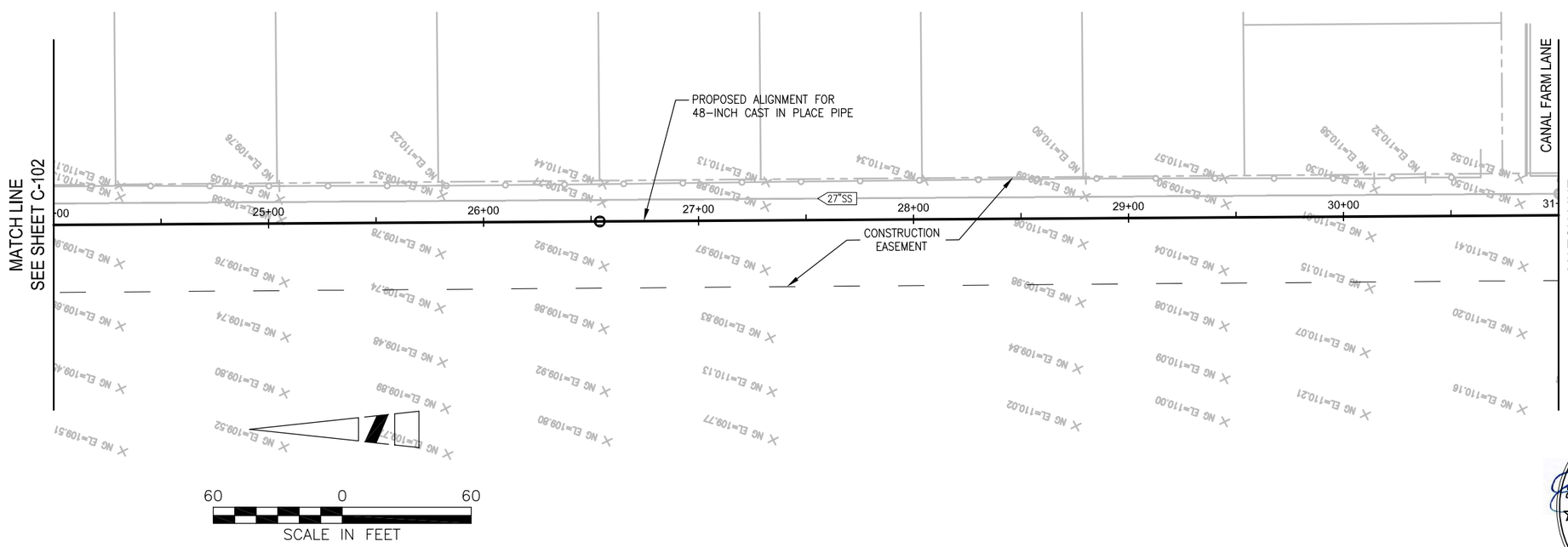

REGISTERED PROFESSIONAL ENGINEER
GARY W. ROGERS
No. 32121
CIVIL
STATE OF CALIFORNIA

REVISIONS			
MARK	DATE	MADE BY	CHECKED	DESCRIPTION

AECOM

AECOM
1120 WEST "T" STREET, SUITE C
LOS BANOS, CALIFORNIA 93635
T: 209.826.5155
F: 209.826.3307
www.aecom.com

CITY OF LOS BANOS
SAN LUIS AND PLACE ROAD
STORMDRAIN PIPELINE AND BASIN
PLAN & PROFILE
STA. 24+00 TO STA. 31+00

PROJECT NO:	60188586
CAD DWG FILE:	C-103
DESIGNED BY:	G.W.R.
DRAWN BY:	D.M.M.
DEPT CHECK:	
PROJ CHECK:	
DATE:	5/6/2011
SCALE:	AS SHOWN

C-103

SHEET 5 OF 41

PATH/FILENAME: \\VSLBS1FP001\DATA\PROJECTS\QUR\60188586-SAN_LUIS_PLACE_SP\400-TECHNICAL\405-CIVIL\001\CAD\PLAN_SET\C-103.DWG
LAST UPDATE: Thursday, May 05, 2011 10:48:33 AM PLOT DATE: Friday, May 06, 2011 10:02:09 AM
ANSI D - 5-May-11

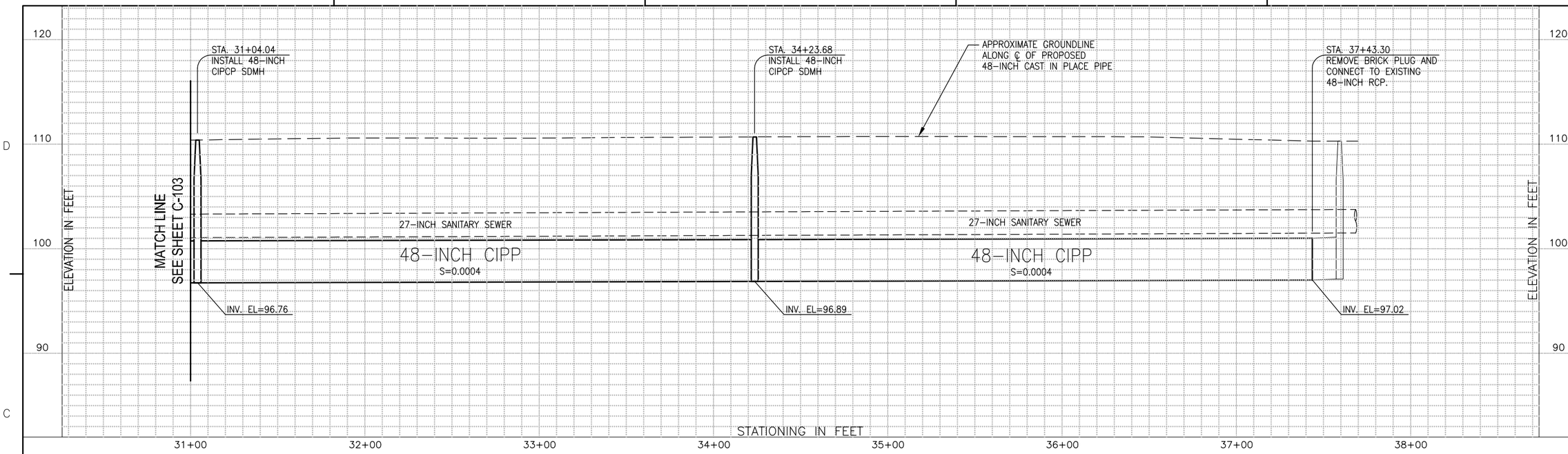

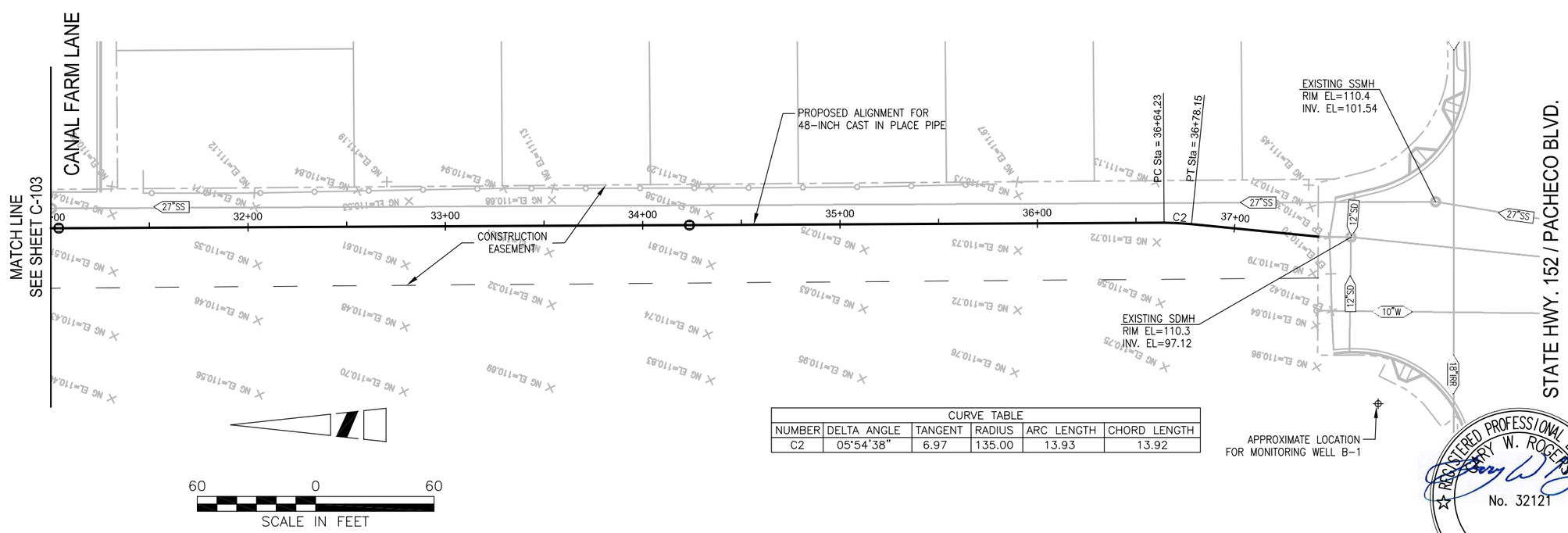

CURVE TABLE					
NUMBER	DELTA ANGLE	TANGENT	RADIUS	ARC LENGTH	CHORD LENGTH
C2	05°54'38"	6.97	135.00	13.93	13.92

REGISTERED PROFESSIONAL ENGINEER
GARY W. ROGERS
No. 32121
CIVIL
STATE OF CALIFORNIA

REVISIONS			
MARK	DATE	MADE BY	CHECKED	DESCRIPTION

AECOM

AECOM
1120 WEST "I" STREET, SUITE C
LOS BANOS, CALIFORNIA 93635
T: 209.826.5155
F: 209.826.3307
www.aecom.com

CITY OF LOS BANOS
SAN LUIS AND PLACE ROAD
STORMDRAIN PIPELINE AND BASIN
PLAN & PROFILE
STA. 31+00 TO STA. 37+43.30

PROJECT NO:	60188586
CAD DWG FILE:	C-104
DESIGNED BY:	G.W.R.
DRAWN BY:	D.M.M.
DEPT CHECK:	
PROJ CHECK:	
DATE:	5/6/2011
SCALE:	AS SHOWN

C-104

SHEET 6 OF 41

PATH/FILENAME: \\VSLBS1FP001\DATA\PROJECTS\CLIB\60188586-SAN_LUIS_PLACE_SP\400-TECHNICAL\456-CIVIL\001\CAD\PLAN_SET\C-104.DWG
LAST UPDATE: Friday, May 06, 2011 9:51:50 AM
PLOT DATE: Friday, May 06, 2011 10:03:23 AM
ANSI D - 6-May-11

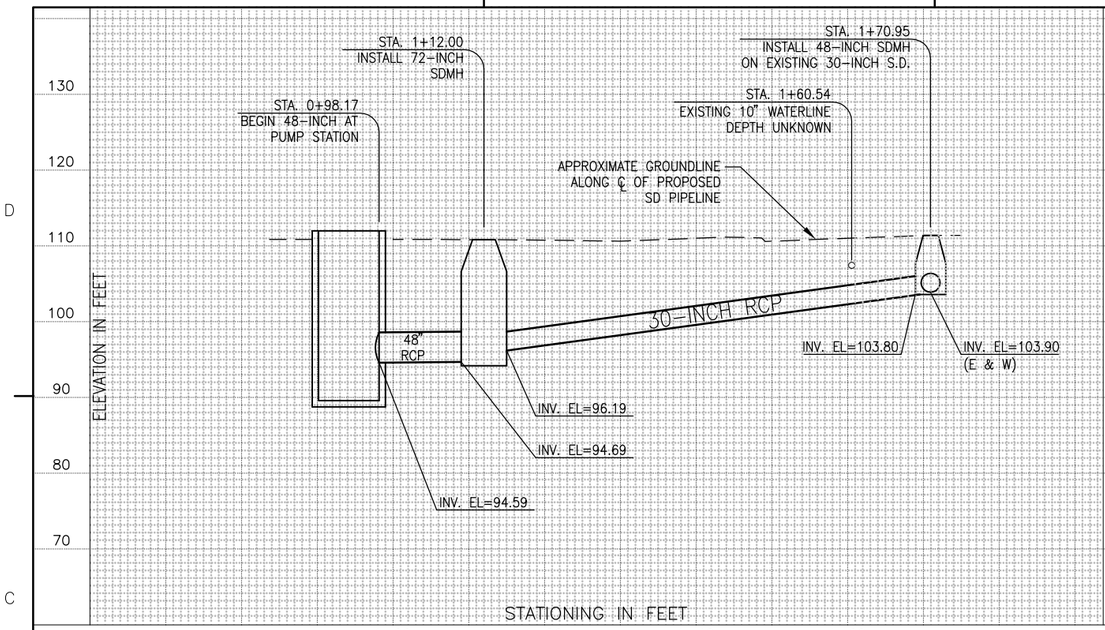

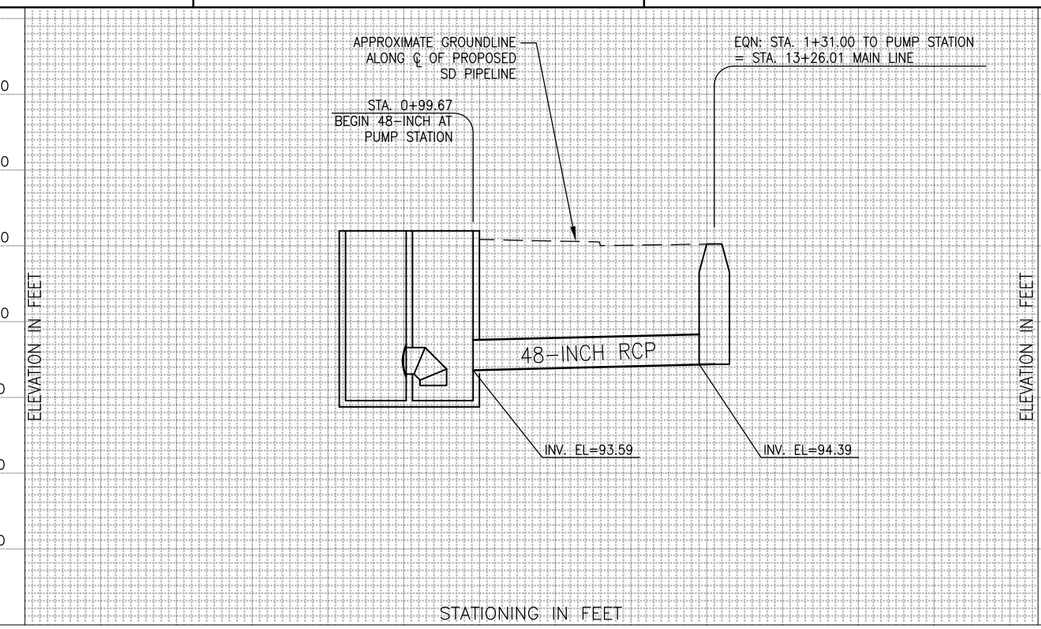

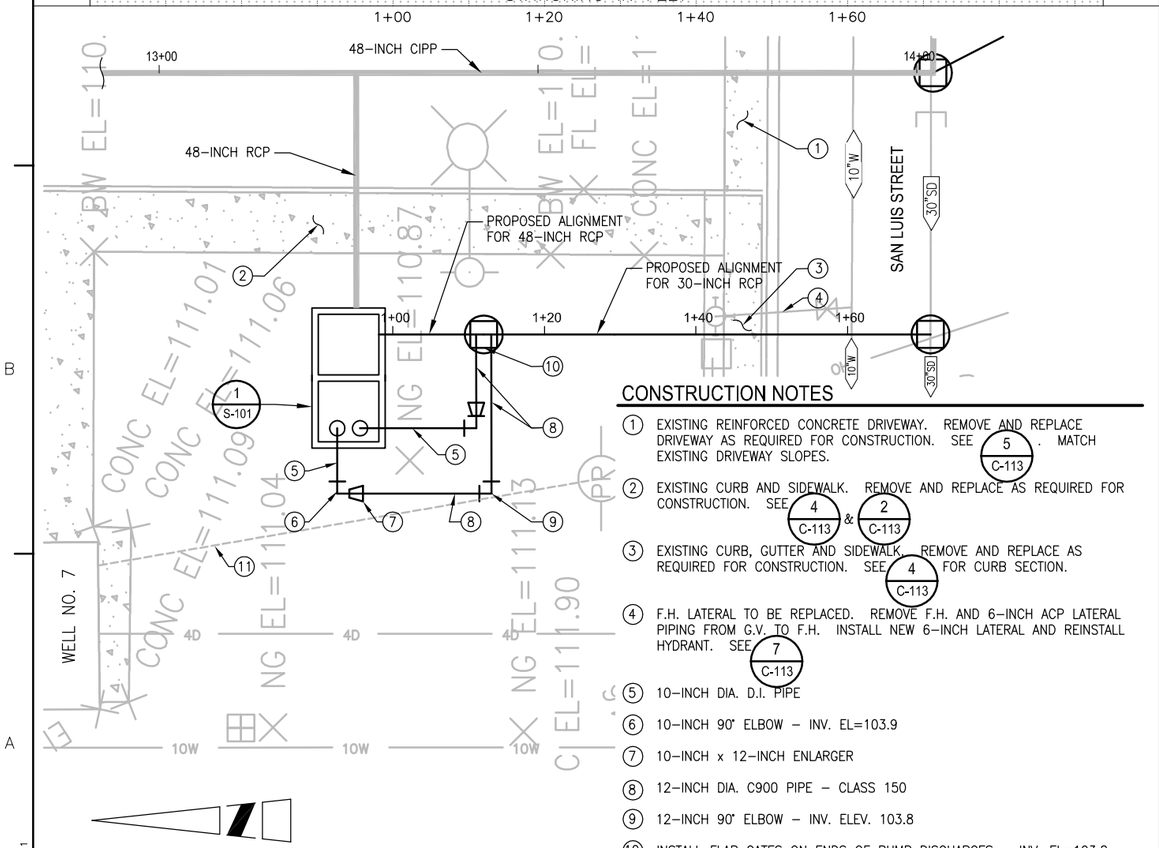

CONSTRUCTION NOTES

1. EXISTING REINFORCED CONCRETE DRIVEWAY. REMOVE AND REPLACE DRIVEWAY AS REQUIRED FOR CONSTRUCTION. SEE 5/C-113. MATCH EXISTING DRIVEWAY SLOPES.
2. EXISTING CURB AND SIDEWALK. REMOVE AND REPLACE AS REQUIRED FOR CONSTRUCTION. SEE 4/C-113 & 2/C-113
3. EXISTING CURB, GUTTER AND SIDEWALK. REMOVE AND REPLACE AS REQUIRED FOR CONSTRUCTION. SEE 4/C-113 FOR CURB SECTION.
4. F.H. LATERAL TO BE REPLACED. REMOVE F.H. AND 6-INCH ACP LATERAL PIPING FROM G.V. TO F.H. INSTALL NEW 6-INCH LATERAL AND REINSTALL HYDRANT. SEE 7/C-113
5. 10-INCH DIA. D.I. PIPE
6. 10-INCH 90° ELBOW – INV. EL=103.9
7. 10-INCH x 12-INCH ENLARGER
8. 12-INCH DIA. C900 PIPE – CLASS 150
9. 12-INCH 90° ELBOW – INV. ELEV. 103.8
10. INSTALL FLAP GATES ON ENDS OF PUMP DISCHARGES – INV. EL=103.8
11. APPROXIMATE LOCATION OF U.G. ELECTRICAL SERVICE TO WELL (460 V., 3 PHASE SERVICE)

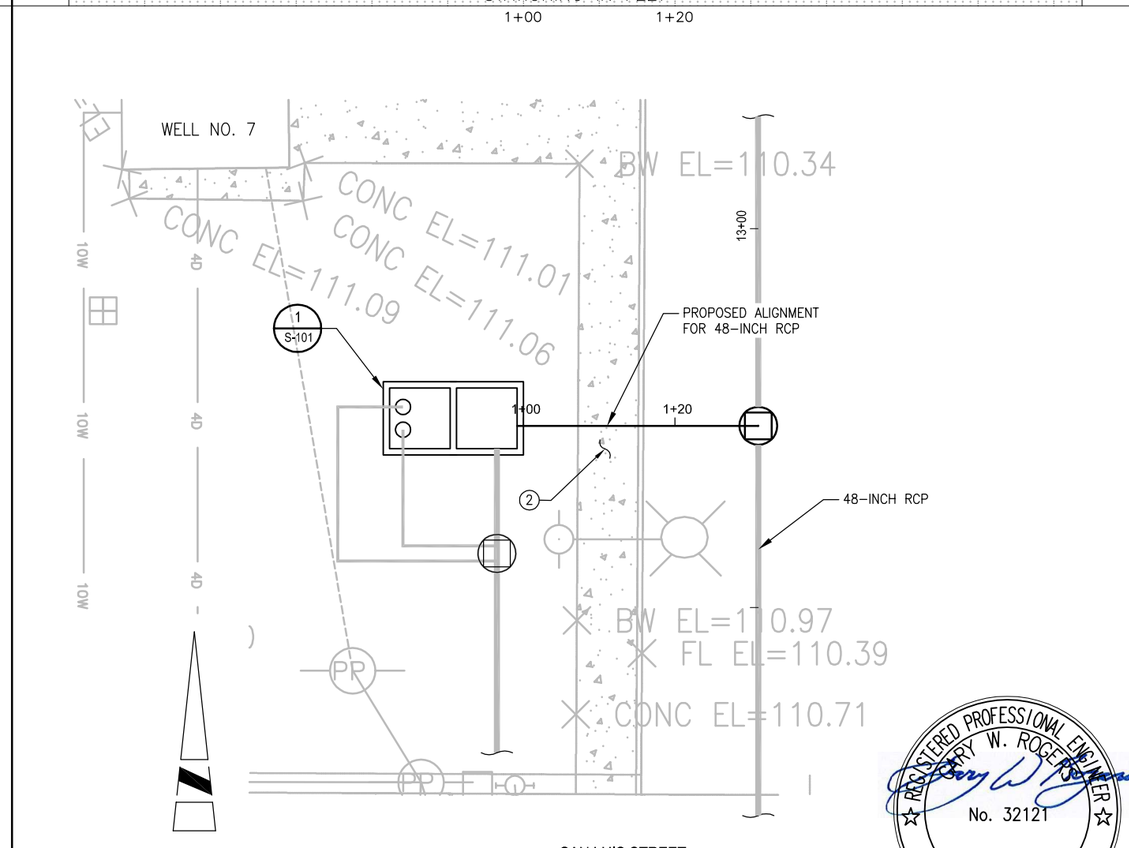

REGISTERED PROFESSIONAL ENGINEER
GARY W. ROGERS
No. 32121
CIVIL
STATE OF CALIFORNIA

MARK	DATE	MADE BY	CHECKED	DESCRIPTION

REVISIONS

AECOM
AECOM
1120 WEST "I" STREET, SUITE C
LOS BANOS, CALIFORNIA 93635
T: 209.826.5155
F: 209.826.3307
www.aecom.com

CITY OF LOS BANOS
SAN LUIS AND PLACE ROAD
STORMDRAIN PIPELINE AND BASIN
PLAN & PROFILE
INLET AND OUTLET PUMP STATION

PROJECT NO:	60188586
CAD DWG FILE:	C-105
DESIGNED BY:	G.W.R.
DRAWN BY:	D.M.M.
DEPT CHECK:	G.W.R.
PROJ CHECK:	
DATE:	5/9/2011
SCALE:	AS SHOWN

C-105

SHEET 7 OF 41

PATH/FILENAME: \\US.BCI.FP001\DATA\PROJECTS\CLIB\60188586-SAN_LUIS_PLACE_SD\400-TECHNICAL\406-CIVIL\001\CAD\PLAN_SET\C-105.DWG
LAST UPDATE: Friday, May 06, 2011 3:23:10 PM
PLOT DATE: Monday, May 09, 2011 9:28:19 AM
ANSI D – 6-May-11

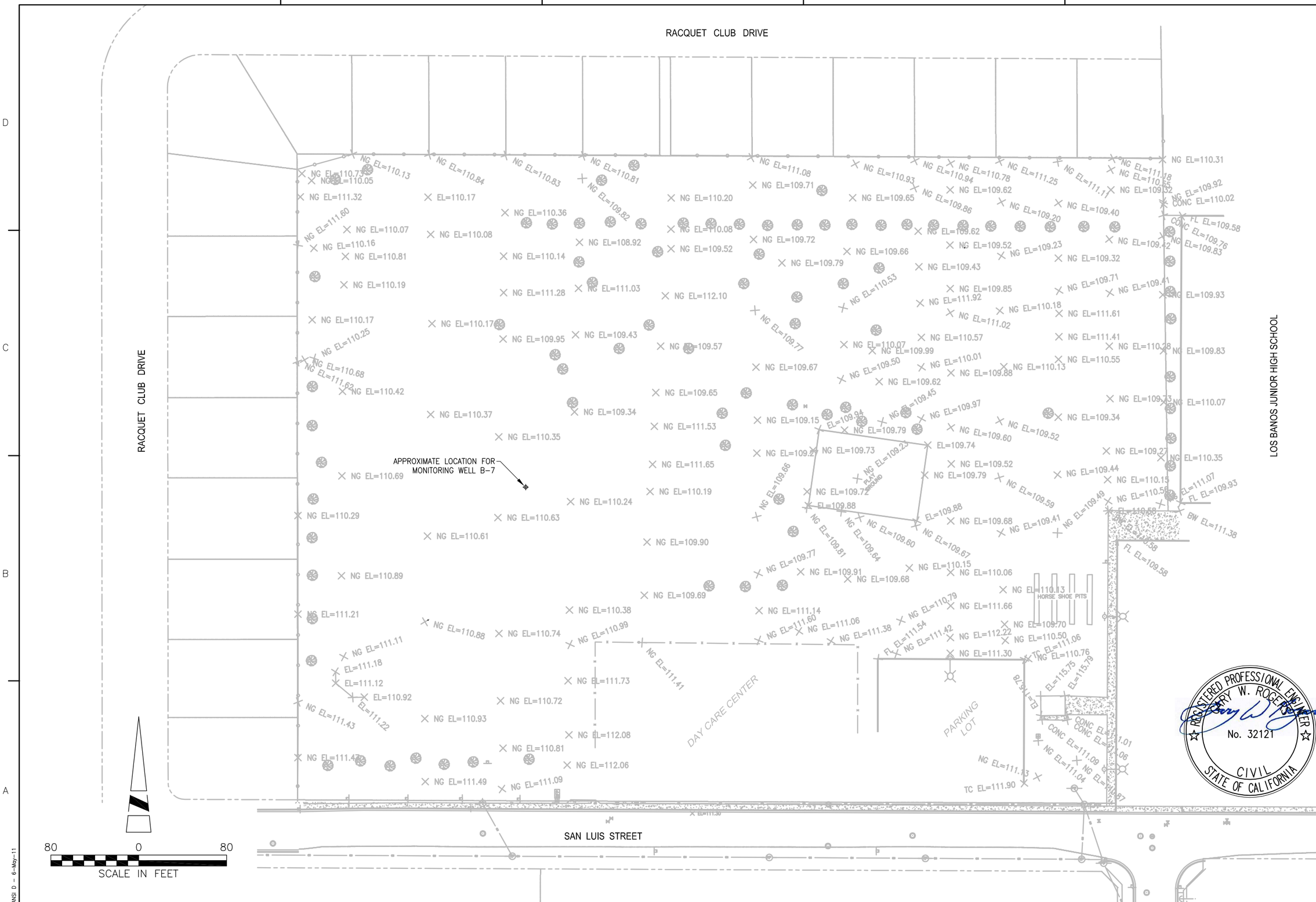

REGISTERED PROFESSIONAL ENGINEER
GARY W. ROGERS
No. 32121
CIVIL
STATE OF CALIFORNIA

MARK	DATE	MADE BY	CHECKED	DESCRIPTION

REVISIONS

AECOM

AECOM
1120 WEST "I" STREET, SUITE C
LOS BANOS, CALIFORNIA 93635

T: 209.826.5155
F: 209.826.3307
www.aecom.com

CITY OF LOS BANOS
SAN LUIS AND PLACE ROAD
STORMDRAIN PIPELINE AND BASIN

EXISTING PARK TOPOGRAPHY

PROJECT NO:	60188586
CAD DWG FILE:	C-106
DESIGNED BY:	G.W.R.
DRAWN BY:	D.M.M.
DEPT CHECK:	G.W.R.
PROJ CHECK:	
DATE:	5/6/2011
SCALE:	AS SHOWN

C-106

SHEET 8 OF 41

PATH/FILENAME: \\US.SEC1FP001\DATA\PROJECTS\CLIB\60188586-SAN LUIS, PLACE, SD\400-TECHNICAL\406-CIVIL\001\CAD\PLAN_SET\C-106.DWG
PLOT DATE: Friday, May 06, 2011 10:05:56 AM
LAST UPDATE: Friday, May 06, 2011 7:39:48 AM

ANSI D - 6-May-11

EXISTING TREE TO BE REMOVED (TYP. 34)

WOOD BEAM BORDER WITH PLAYGROUND EQUIPMENT TO BE REMOVED

PLAY GROUND

HORSE SHOE PITS

HORSESHOE PITS TO BE REMOVED

WELL NO. 7

EXISTING CHAINLINK BACKSTOP

DAY CARE CENTER

PARKING LOT

60 0 60

SCALE IN FEET

REGISTERED PROFESSIONAL ENGINEER
GARY W. ROGERS
No. 32121
CIVIL
STATE OF CALIFORNIA

REVISIONS			
MARK	DATE	MADE BY	CHECKED	DESCRIPTION

AECOM

AECOM
1120 WEST "I" STREET, SUITE C
LOS BANOS, CALIFORNIA 93635
T: 209.826.5155
F: 209.826.3307
www.aecom.com

CITY OF LOS BANOS
SAN LUIS AND PLACE ROAD
STORMDRAIN PIPELINE AND BASIN

BASIN DEMOLITION PLAN

PROJECT NO:	60188586
CAD DWG FILE:	C-107
DESIGNED BY:	G.W.R.
DRAWN BY:	D.M.M.
DEPT CHECK:	G.W.R.
PROJ CHECK:	
DATE:	5/6/2011
SCALE:	AS SHOWN

C-107

SHEET 9 OF 41

PATH/FILENAME: \\VSLBS1FP001\DATA\PROJECTS\CLIB\60188586-SAN_LUIS_PLACE_SP\400-TECHNICAL\405-CIVIL\001\CAD\PLAN_SET\C-107.DWG
LAST UPDATE: Friday, May 06, 2011 7:51:35 AM PLOT DATE: Friday, May 06, 2011 10:07:37 AM
ANSI D - 6-May-11

CONSTRUCTION NOTES

1. IN AREAS WHERE NO FILL IS REQUIRD, UNIFORM GRADE TO NATURAL GROUND WITHIN 20' OF TOP OF BASIN.
2. IN AREAS WHERE FILL IS REQUIRED, GRADE FLAT FOR 10 FEET THEN GRADE TO NATURAL GROUND IN NEXT 10 FEET FROM TOP OF BASIN.
3. INSTALL CHRISTY CATCH BASIN U21 WITH CHRISTY U21-HT WELDED STEEL GRATE OR EQUAL. GRATES SHALL BE BOLTED DOWN. SEE DETAIL 3/C-113
4. INSTALL 10-INCH PVC (SDR35) CONFORMING TO ASTM D3034
5. INSTALL 3-INCH PVC (SCHEDULE 40)

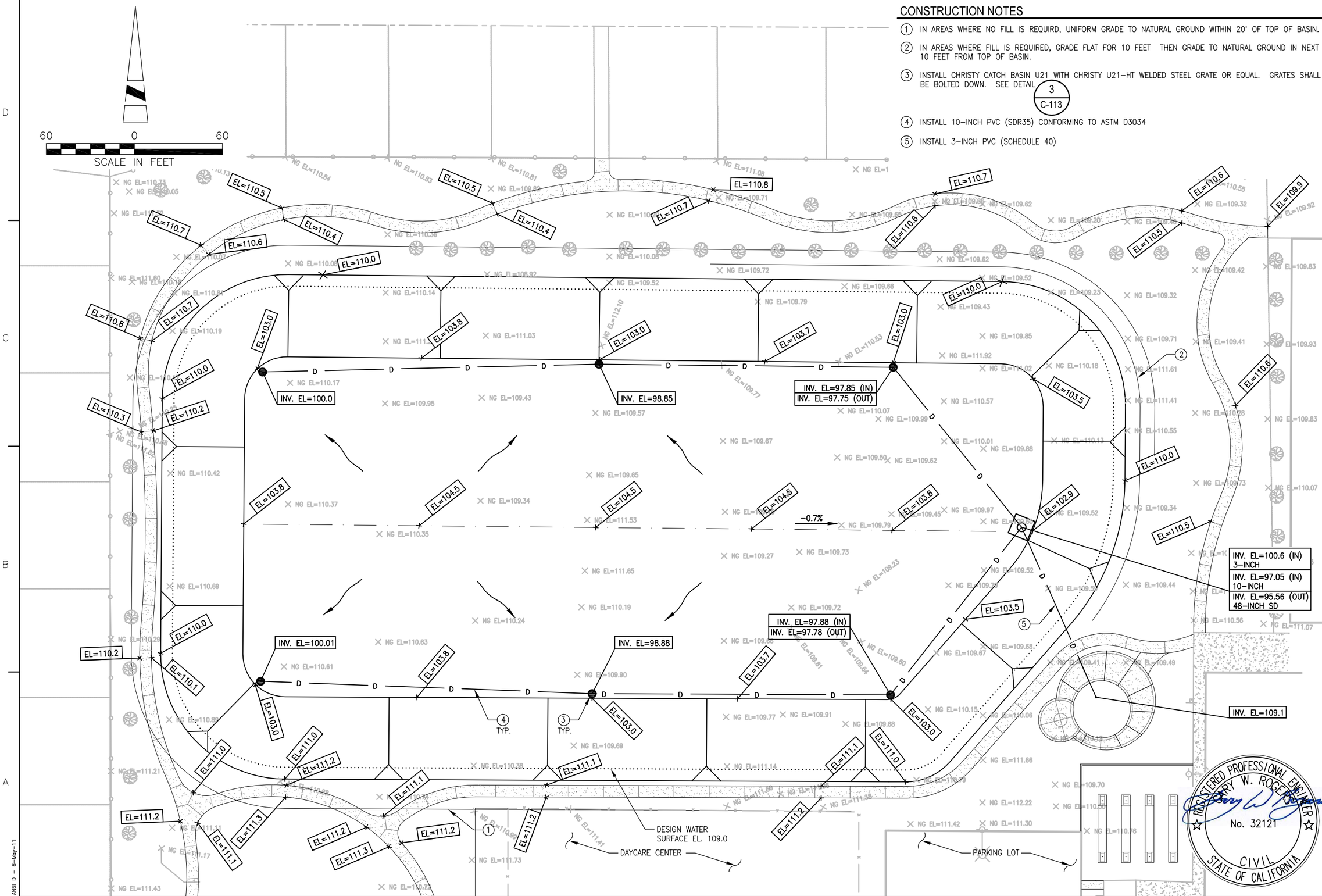

MARK	DATE	MADE BY	CHECKED	DESCRIPTION

REVISIONS

AECOM
AECOM
1120 WEST "T" STREET, SUITE C
LOS BANOS, CALIFORNIA 93635
T: 209.826.5155
F: 209.826.3307
www.aecom.com

CITY OF LOS BANOS
SAN LUIS AND PLACE ROAD
STORMDRAIN PIPELINE AND BASIN

BASIN PLAN

REGISTERED PROFESSIONAL ENGINEER
GARY W. ROGERS
No. 32121
CIVIL
STATE OF CALIFORNIA

PROJECT NO:	60188586
CAD DWG FILE:	C-108
DESIGNED BY:	G.W.R.
DRAWN BY:	D.M.M.
DEPT CHECK:	G.W.R.
PROJ CHECK:	
DATE:	5/6/2011
SCALE:	AS SHOWN

C-108

SHEET 10 OF 41

PATH/FILENAME: \\US\BS1FP001\DATA\PROJECTS\CLIEN\60188586-SAN_LUIS_PLACE_SDV-600-TECHNICAL\406-CIVIL\001\CAD\PLAN_SET\C-108.DWG
PLOT DATE: Friday, May 06, 2011 10:09:39 AM
LAST UPDATE: Friday, May 06, 2011 9:51:27 AM
ANSI D - 6-May-11

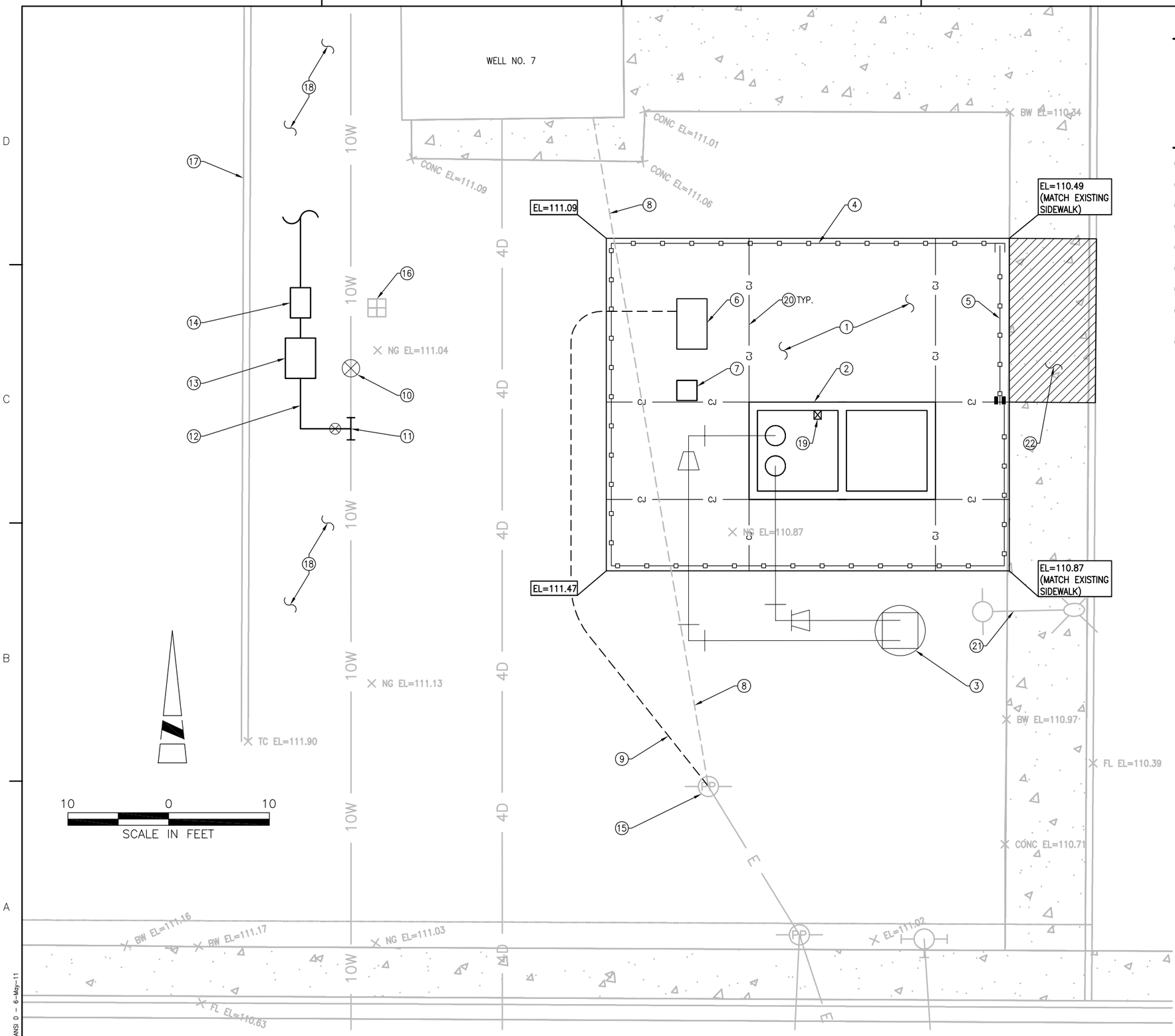

GENERAL NOTES

1. CONDUITS, OTHER THAN ELECTRICAL SERVICE NOT SHOWN. INSTALL ALL CONDUITS BELOW GRADES. STUB CONDUITS THROUGH WALL(S) OF PUMP STRUCTURE FOR SUBMERSIBLE PUMPS AND WATER LEVEL MEASURING DEVICE.

CONSTRUCTION NOTES

1. 6–INCH THICK REINFORCED CONCRETE SLAB. (40'x33') SEE 4/C-114
2. PUMP STRUCTURE. SEE 1/S-101
3. 72–INCH S.D.M.H.
4. 7–FOOT TUBULAR STEEL FENCE
5. 14–FOOT WIDE TUBULAR STEEL ROLLING GATE
6. MOTOR CONTROL CENTER
7. IRRIGATION CONTROLLER
8. APPROXIMATE LOCATION OF U.G. 460 V., 3 PHASE ELECTRICAL SERVICE TO WELL NO. 7
9. PROPOSED ALIGNMENT FOR U.G. ELECTRICAL SERVICE
10. APPROXIMATE LOCATION OF BUTTERFLY VALVE AND TRANSITION FROM STEEL TO ACP WATERLINE. LOCATE VALVE PRIOR TO TAPPING MAIN.
11. HOT TAP LOCATION FOR IRRIGATION SERVICE (6 FEET SOUTH OF BUTTERFLY VALVE). USE STAINLESS STEEL TAPPING SLEEVE WITH STAINLESS STEEL BOLTS.
12. 4–INCH DUCTILE IRON PIPE
13. 4–INCH IRRIGATION METER. SEE 1/C-114
14. 4–INCH BACKFLOW PREVENTION DEVICE. SEE 2/L-117
15. EXISTING SERVICE POLE AND POINT OF CONNECTION FOR ELECTRICAL SERVICE.
16. CONCRETE UTILITY BOX FOR WELL 7 FLOW METER.
17. EXISTING CONCRETE CURB
18. LANDSCAPED AREA WITH GRASS, SHRUBS AND SPRINKLERS. REPAIR ANY IRRIGATION LINES, SPRINKLERS, PLANTINGS, ETC. DAMAGED BY CONSTRUCTION.
19. ULTRASONIC WATER LEVEL MEASURING DEVICE
20. CONTRACTION JOINT
21. EXISTING ELECTROLIER WITH U.G. ELECTRICAL
22. REMOVE AND REPLACE 16 L.F. OF CURB AND SIDEWALK CENTERED ON GATE. SEE 2/C-113 FOR CURB DETAIL.

INSTALL 2 #4 BARS IN CURB AND MODIFY FACE OF CURB FOR STATION ACCESS (DUPLICATE WHAT IS IN FRONT OF WELL NO. 7). DRIVE OVER SIDEWALK SECTION SHALL MATCH WHAT IS SHOWN ON 5/C-113

MARK	DATE	MADE BY	CHECKED	DESCRIPTION

REVISIONS

AECOM
AECOM
1120 WEST "I" STREET, SUITE C
LOS BANOS, CALIFORNIA 93635
T: 209.826.5155
F: 209.826.3307
www.aecom.com

CITY OF LOS BANOS
SAN LUIS AND PLACE ROAD
STORMDRAIN PIPELINE AND BASIN
SITE AND GRADING PLAN FOR PUMP STRUCTURE

REGISTERED PROFESSIONAL ENGINEER
GARY W. ROGERS
No. 32121
CIVIL
STATE OF CALIFORNIA

PROJECT NO:	60188586
CAD DWG FILE:	C-109
DESIGNED BY:	G.W.R.
DRAWN BY:	D.M.M.
DEPT CHECK:	
PROJ CHECK:	
DATE:	5/6/2011
SCALE:	AS SHOWN

C-109

SHEET 11 OF 41

PATH/FILENAME: \\VSLBS1FP001\DATA\PROJECTS\CLB\60188586-SAN_LUIS_PLACE_SP\400-TECHNICAL\405-CIVIL\001\CAD\PLAN_SET\C-109.DWG
LAST UPDATE: Friday, May 06, 2011 10:11:36 AM PLOT DATE: Friday, May 06, 2011 3:22:43 PM
ANSI D – 6–May–11

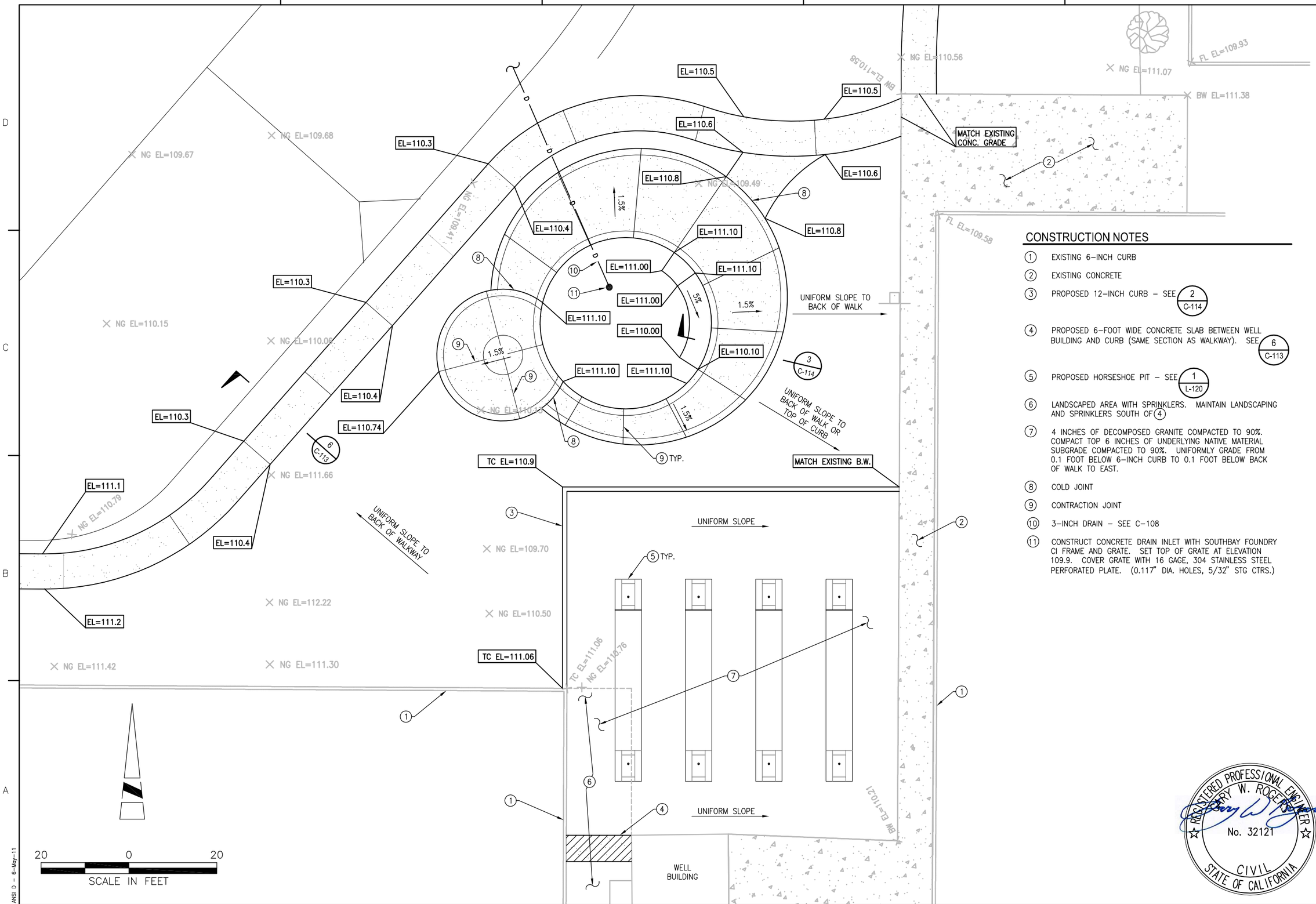

CONSTRUCTION NOTES

1. EXISTING 6-INCH CURB
2. EXISTING CONCRETE
3. PROPOSED 12-INCH CURB – SEE 2/C-114
4. PROPOSED 6-FOOT WIDE CONCRETE SLAB BETWEEN WELL BUILDING AND CURB (SAME SECTION AS WALKWAY). SEE 6/C-113
5. PROPOSED HORSESHOE PIT – SEE 1/L-120
6. LANDSCAPED AREA WITH SPRINKLERS. MAINTAIN LANDSCAPING AND SPRINKLERS SOUTH OF 4
7. 4 INCHES OF DECOMPOSED GRANITE COMPACTED TO 90%. COMPACT TOP 6 INCHES OF UNDERLYING NATIVE MATERIAL SUBGRADE COMPACTED TO 90%. UNIFORMLY GRADE FROM 0.1 FOOT BELOW 6-INCH CURB TO 0.1 FOOT BELOW BACK OF WALK TO EAST.
8. COLD JOINT
9. CONTRACTION JOINT
10. 3-INCH DRAIN – SEE C-108
11. CONSTRUCT CONCRETE DRAIN INLET WITH SOUTHBAY FOUNDRY CI FRAME AND GRATE. SET TOP OF GRATE AT ELEVATION 109.9. COVER GRATE WITH 16 GAGE, 304 STAINLESS STEEL PERFORATED PLATE. (0.117" DIA. HOLES, 5/32" STG CTRS.)

MARK	DATE	MADE BY	CHECKED	DESCRIPTION

REVISIONS

AECOM
AECOM
1120 WEST "I" STREET, SUITE C
LOS BANOS, CALIFORNIA 93635
T: 209.826.5155
F: 209.826.3307
www.aecom.com

CITY OF LOS BANOS
SAN LUIS AND PLACE ROAD
STORMDRAIN PIPELINE AND BASIN
GRADING AND DRAINAGE PLAN FOR HORSESHOE PITS AND PLAYGROUND AREA

REGISTERED PROFESSIONAL ENGINEER
GARY W. ROGERS
No. 32121
CIVIL
STATE OF CALIFORNIA

PROJECT NO:	60188586
CAD DWG FILE:	C-110
DESIGNED BY:	G.W.R.
DRAWN BY:	D.M.M.
DEPT CHECK:	G.W.R.
PROJ CHECK:	
DATE:	5/9/2011
SCALE:	AS SHOWN

C-110

SHEET 12 OF 41

PATH/FILENAME: \\USLBS1FP001\DATA\PROJECTS\CLB\60188586-SAN_LUIS_PLACE_SD\400-TECHNICAL\406-CIVIL\001\CAD\PLAN_SET\C-110.DWG
LAST UPDATE: Friday, May 06, 2011 10:11:16 AM
PLOT DATE: Monday, May 09, 2011 10:25:59 AM
ANSI D – 6-May-11

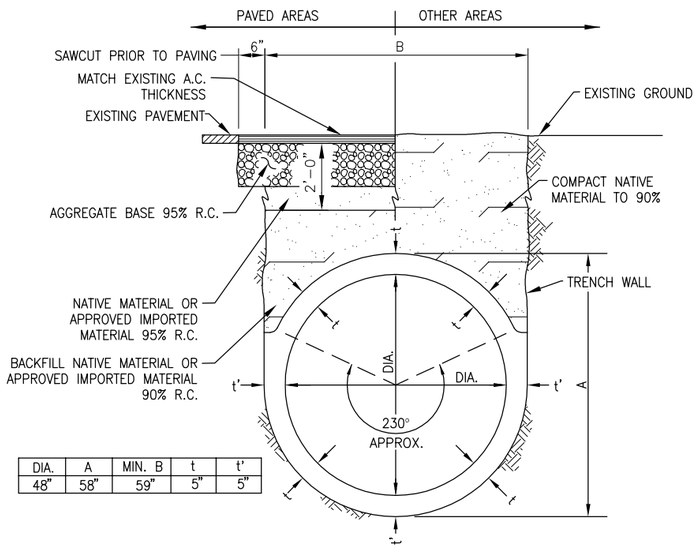

DIA.	A	MIN. B	t	t'
48"	58"	59"	5"	5"

CAST-IN-PLACE CONCRETE PIPE AND TRENCH (1 / -)

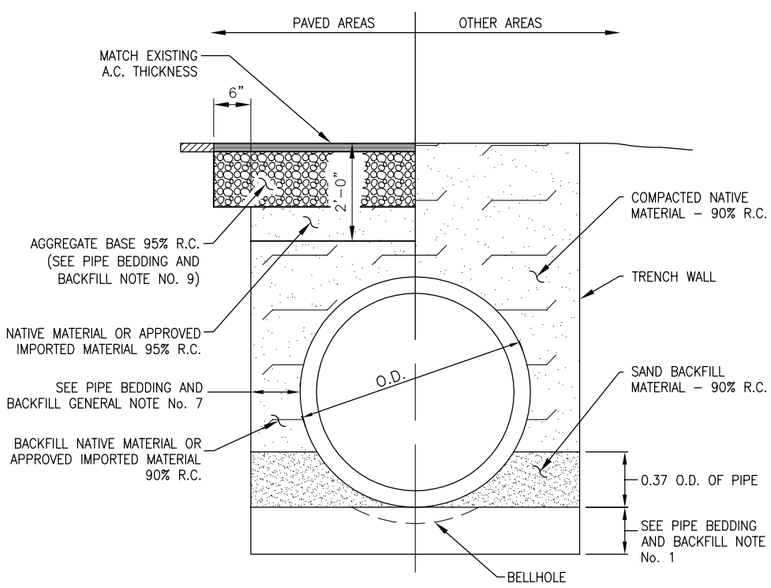

RIGID WALL PIPE BEDDING AND BACKFILL (2 / -)

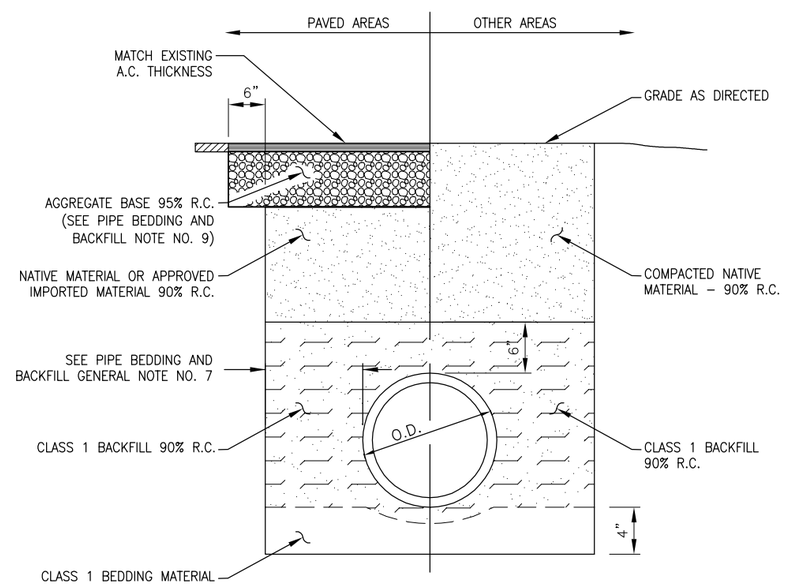

FLEXIBLE WALLED PIPE BACKFILL (3 / -)

GENERAL NOTES

PIPE BEDDING AND BACKFILL:

1. IF BOTTOM OF TRENCH IS SOFT AND UNSTABLE OR IF GROUNDWATER IS PRESENT, IT SHALL BE EXCAVATED 1 FOOT BELOW GRADE AND BACKFILLED WITH SUITABLE IMPORTED MATERIAL.
2. TRENCH BOTTOM OR GRADE OR BOTH FOR ALL PIPE SHALL BE GRADED TO PROVIDE UNIFORM SUPPORT FOR THE FULL LENGTH OF THE PIPE EXCEPT AT BELLHOLES.
3. WHERE COMPACTED BACKFILL IS SHOWN, MATERIAL SHALL BE PLACED IN LIFTS AND COMPACTED.
4. WHERE CONSOLIDATED BACKFILL IS SHOWN, THE MATERIAL SHALL BE CONSOLIDATED TO THE SOIL DENSITY OF THE SURROUNDING GROUND.
5. COUPLINGS AND BELLHOLES FOR RUBBER GASKET PIPE SHALL HAVE A MINIMUM CLEARANCE OF 3 INCHES BETWEEN THE BOTTOM OF THE COUPLING OR BELLHOLE AND THE EXTERIOR OF THE PIPE OR BARREL, BUT I NO CASE SHALL BE SMALLER THAN REQUIRED TO FACILITATE PLACING OF PIPE OR PROPER JOINTING OF THE PIPE OR BOTH.
6. PIPE BEDDING AND BACKFILL DETAILS ARE SHOWN WITH VERTICAL TRENCH WALLS FOR CONVENIENCE. SLOPED TRENCH WALL MAY BE USED.
7. FOR PIPES 24 INCHES AND SMALLER IN DIAMETER, TRENCH WIDTH SHALL BE A MINIMUM OF PIPE O.D. PLUS 16 INCHES AND A MAXIMUM OF PIPE O.D. PLUS 24 INCHES. FOR PIPES LARGER THAN 24 INCHES IN DIAMETER, TRENCH WIDTH SHALL BE A MINIMUM OF PIPE O.D. PLUS 24 INCHES AND A MAXIMUM OF PIPE O.D. PLUS 36 INCHES.

REGISTERED PROFESSIONAL ENGINEER
GARY W. ROGERS
No. 32121
CIVIL
STATE OF CALIFORNIA

MARK	DATE	MADE BY	CHECKED	DESCRIPTION

REVISIONS

AECOM
AECOM
1120 WEST "I" STREET, SUITE C
LOS BANOS, CALIFORNIA 93635
T: 209.826.5155
F: 209.826.3307
www.aecom.com

CITY OF LOS BANOS
SAN LUIS AND PLACE ROAD
STORMDRAIN PIPELINE AND BASIN

PIPE BACKFILL DETAILS

PROJECT NO:	60188586
CAD DWG FILE:	C-111
DESIGNED BY:	D.B.
DRAWN BY:	D.M.M.
DEPT CHECK:	G.W.R.
PROJ CHECK:	
DATE:	5/6/2011
SCALE:	AS SHOWN

C-111

SHEET 13 OF 41

PATH/FILENAME: \\VSLBS1FP001\DATA\PROJECTS\CLIR\60188586-SAN_LUIS_PLACE_SD\400-TECHNICAL\405-CIVIL\001\CAD\PLAN_SET\C-111.DWG
LAST UPDATE: Thursday, May 05, 2011 11:50:40 AM PLOT DATE: Friday, May 06, 2011 10:12:13 AM
ANSI D - 5-May-11

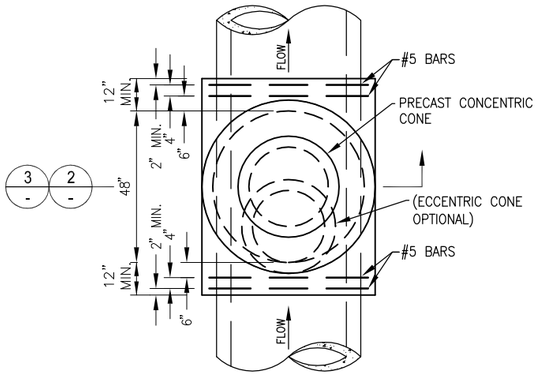

CIPP MANHOLE PLAN (1 / -)

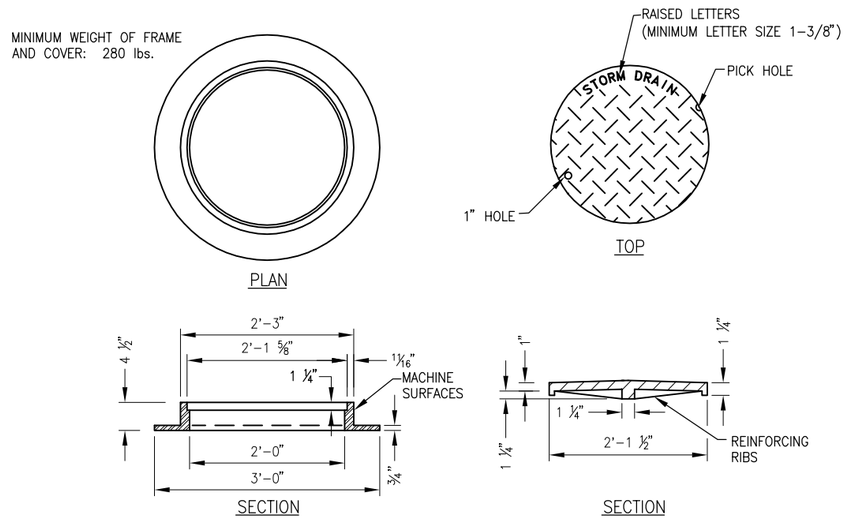

STORMDRAIN MANHOLE COVER AND FRAME (3 / -)

GENERAL NOTES

MANHOLES:

1. MANHOLE FRAME AND COVER INSTALLATION DETAIL SHOWN IS FOR SETTING FRAMES AND COVERS TO GRADE IN PAVED AREAS. FOR MANHOLE FRAME AND COVER GRADES AND INSTALLATION REQUIREMENTS IN NON-PAVED AREAS, REFER TO THE SPECIFICATIONS
2. REINFORCING BAR HOOPS SHALL BE 50 INCHES IN DIAMETER.
3. REINFORCING STEEL SHALL BE GRADE 60.
4. LAP BAR HOOPS 30 BAR DIAMETERS.

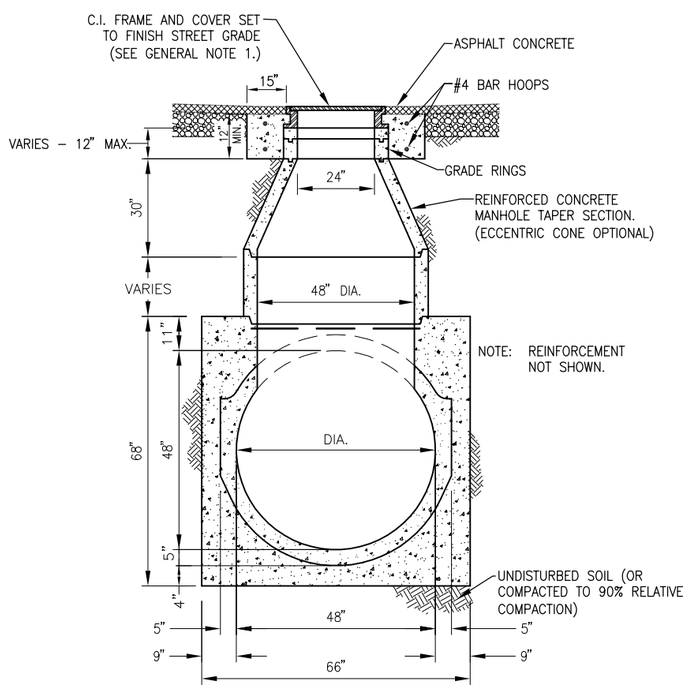

48-INCH CIPP INLINE MANHOLE SECTION (2 / -)

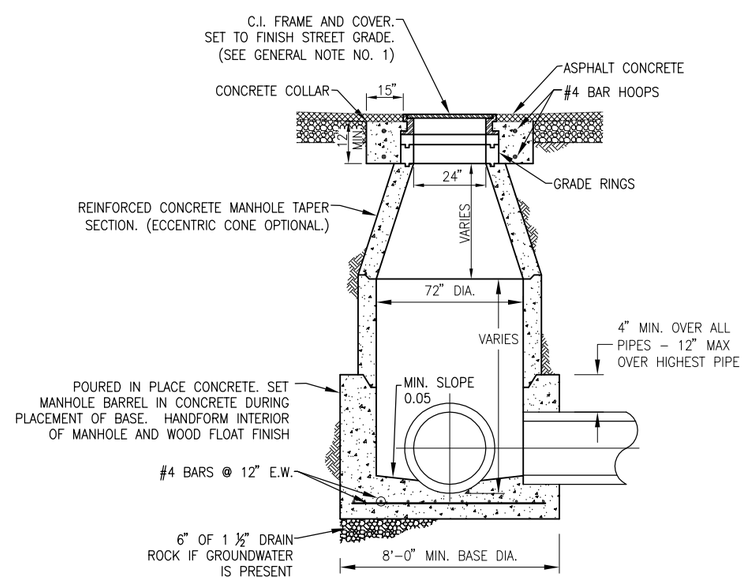

72-INCH MANHOLE SECTION (4 / -)

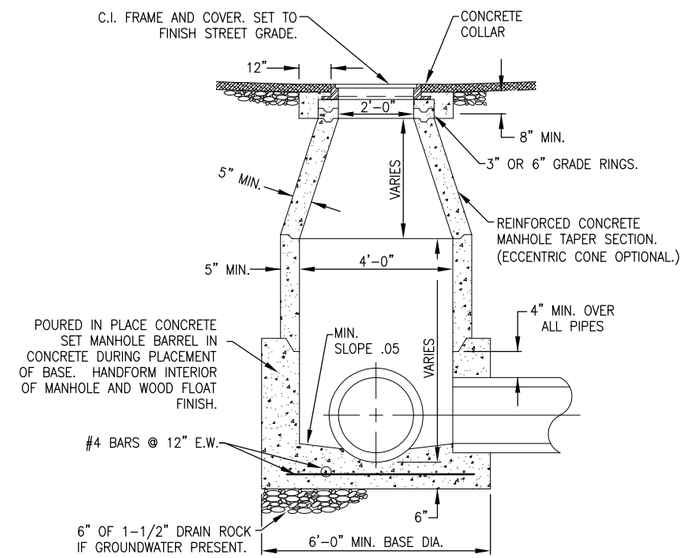

48-INCH MANHOLE SECTION (5 / -)

REGISTERED PROFESSIONAL ENGINEER
GARY W. ROGERS
No. 32121
CIVIL
STATE OF CALIFORNIA

MARK	DATE	MADE BY	CHECKED	DESCRIPTION

REVISIONS

AECOM
AECOM
1120 WEST "I" STREET, SUITE C
LOS BANOS, CALIFORNIA 93635
T: 209.826.5155
F: 209.826.3307
www.aecom.com

CITY OF LOS BANOS
SAN LUIS AND PLACE ROAD
STORMDRAIN PIPELINE AND BASIN

STORMDRAIN MANHOLES

PROJECT NO:	60188586
CAD DWG FILE:	C-112
DESIGNED BY:	D.M.B.
DRAWN BY:	D.M.M.
DEPT CHECK:	D.M.B.
PROJ CHECK:	
DATE:	5/6/2011
SCALE:	AS SHOWN

C-112

PATH/FILENAME: \\VISLES1FP001\DATA\PROJECTS\CLIENT\60188586-SAN_LUIS_PLACE_SD\400-TECHNICAL\401-CIVIL\001\CAD\PLAN_SET\C-112.DWG
LAST UPDATE: Thursday, May 05, 2011 11:49:43 AM
PLOT DATE: Friday, May 06, 2011 10:13:18 AM
ANSI D – 5-May-11

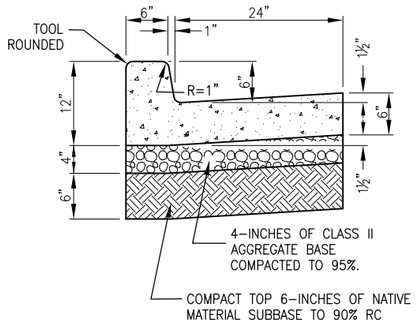

CURB AND GUTTER SECTION 1/-

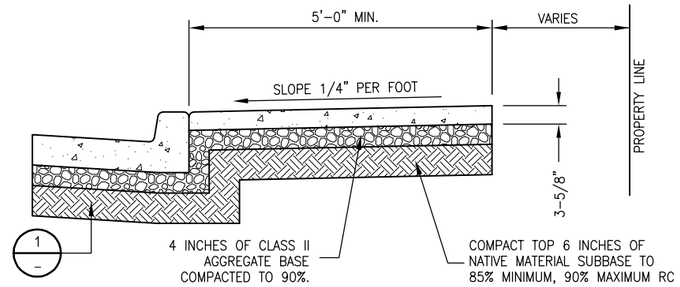

SIDEWALK SECTION 4/-

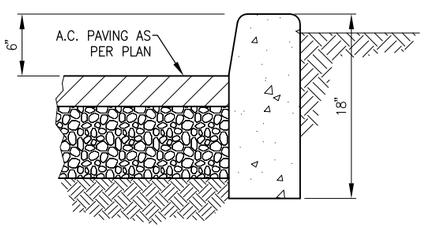

RAISED CURBING DETAIL 2/-

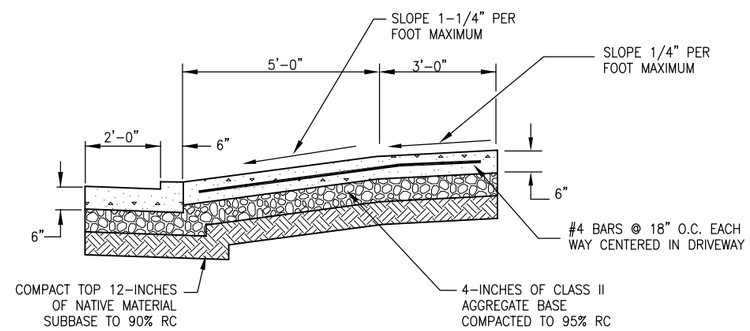

DRIVEWAY SECTION 5/-

NOTE: GRATE NOT SHOWN. GRATE SHALL BE A BOLTED DOWN U21-HT OR EQUIVALENT

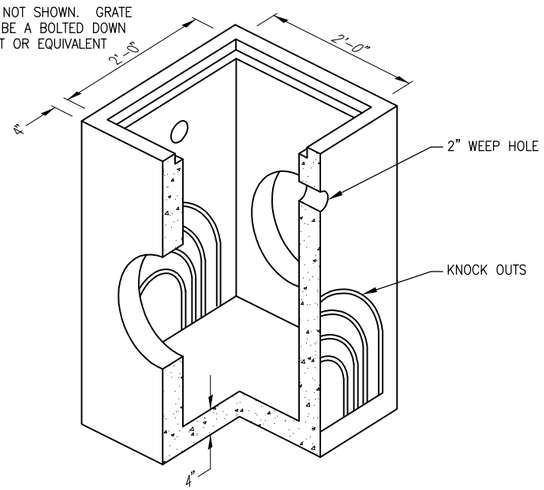

CATCH BASIN 3/-

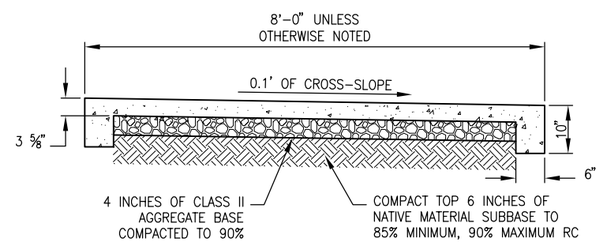

WALKWAY SECTION 6/-

GENERAL NOTES

CURB & GUTTER

1. OWNER SHALL APPROVE SUBGRADE & BASEROCK PREPARATION PRIOR TO PLACEMENT OF CONCRETE.
2. ON CURB AND GUTTER REPLACEMENT, 6-INCHES OF CLASS II AGGREGATE BASE COMPACTED TO 95% OVER UNDISTURBED NATIVE MATERIAL SUBBASE MAY BE USED IN LIEU OF 4-INCHES OF CLASS II AGGREGATE BASE (95% COMPACTION) OVER 6-INCHES OF NATIVE MATERIAL SUBBASE (90% COMPACTION).
3. MATCH CONTRACTION JOINT SPACING OF CURB AND GUTTER BEING REPLACED.

6" RAISED CURB

1. MATCH FACE BATTER OR RADIUS OF CURB BEING REPLACED IN ADDITION TO WIDTH.

WALKWAY SECTION

1. PROVIDE 1-INCH DEEP CONTRACTION JOINTS AT 5-FOOT CENTERS TRANSVERSELY.

FIRE HYDRANT

1. WRAP THE FIRE HYDRANT AND WATER MAIN FITTINGS WITH 6-MIL PLASTIC PRIOR TO POURING THRUST BLOCKS.
2. NOZZLE CAP SHALL BE ZERO TO 6 INCHES BEHIND THE BACK OF SIDEWALK.

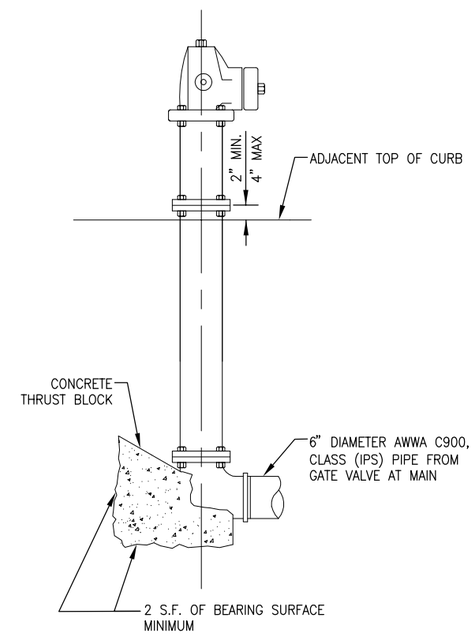

FIRE HYDRANT INSTALLATION 7/-

REGISTERED PROFESSIONAL ENGINEER
GARY W. ROGERS
No. 32121
CIVIL
STATE OF CALIFORNIA

MARK	DATE	MADE BY	CHECKED	DESCRIPTION

REVISIONS

AECOM

AECOM
1120 WEST "T" STREET, SUITE C
LOS BANOS, CALIFORNIA 93635
T: 209.826.5155
F: 209.826.3307
www.aecom.com

CITY OF LOS BANOS
SAN LUIS AND PLACE ROAD
STORMDRAIN PIPELINE AND BASIN

MISCELLANEOUS DETAILS

PROJECT NO:	60188586
CAD DWG FILE:	C-113
DESIGNED BY:	D.B.
DRAWN BY:	D.M.M.
DEPT CHECK:	G.W.R.
PROJ CHECK:	
DATE:	5/6/2011
SCALE:	AS SHOWN

C-113

SHEET 15 OF 41

PATH/FILENAME: \\US\BS1FP001\DATA\PROJECTS\CLB\60188586-SAN_LUIS_PLACE_SD\400-TECHNICAL\406-CIVIL\001\CAD\PLAN_SET\C-113.DWG
LAST UPDATE: Friday, May 06, 2011 8:59:23 AM PLOT DATE: Friday, May 06, 2011 10:14:15 AM

ANSI D - 6-May-11

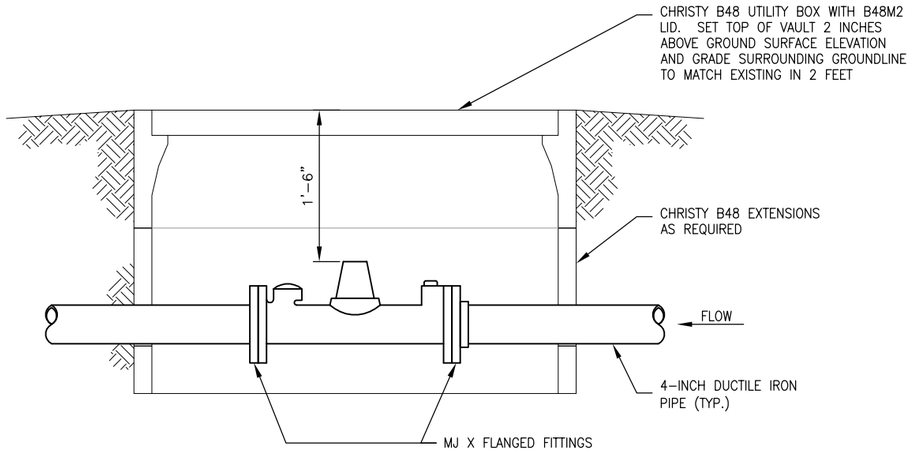

4-INCH METER DETAIL (1 / -)

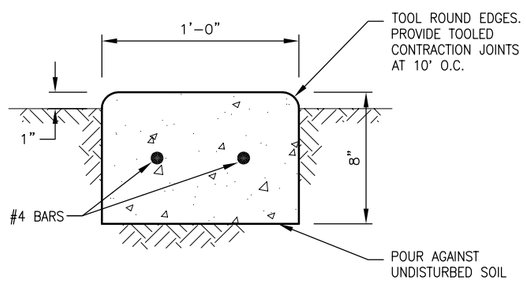

12-INCH CURB (2 / -)

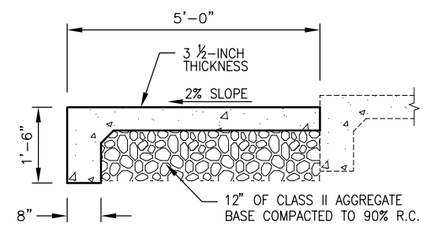

TOT LOT ACCESS SECTION (5 / -)

NOTES:
1. SEE SLAB GENERAL NOTE.
2. ACCESSIBLE ACCESS TO TOT LOT NOT SHOWN – SEE 5 / -

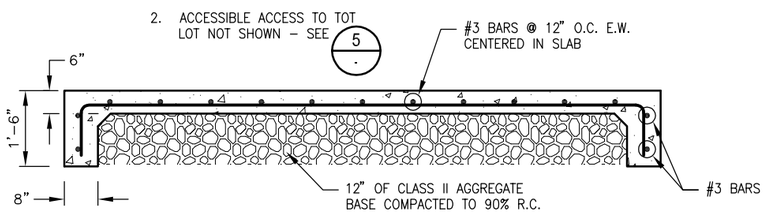

PLAYGROUND SLAB SECTION (3 / -)

NOTE: SEE SLAB GENERAL NOTE.

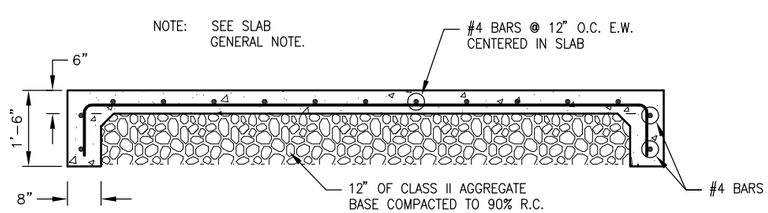

PUMP STATION SLAB SECTION (4 / -)

GENERAL NOTES

4-INCH METER

1. COMPACT TOP 6 INCHES OF NATIVE MATERIAL SUBGRADE UNDERNEATH UTILITY BOX TO A MINIMUM DENSITY OF 90% OF MAXIMUM DRY DENSITY PRIOR TO SETTING BOX OR EXTENSIONS. BOX/EXTENSIONS SHALL BE SET LEVEL.
2. PROVIDE A MINIMUM OF 24 INCHES OF STRAIGHT PIPE UPSTREAM AND DOWNSTREAM OF METER FLANGES.

SLAB

1. CUT AND REMOVE A 6-INCH LENGTH OF EVERY OTHER REINFORCING BAR AT CONTRACTION JOINT LOCATIONS. CENTER REMOVAL SECTION ON JOINT.

TOT LOT ACCESS

1. PROVIDE SAME CONTRACTION JOINTS AND FINISH FOR ACCESS AS SIDEWALK.

MARK	DATE	MADE BY	CHECKED	DESCRIPTION

REVISIONS

AECOM
AECOM
1120 WEST "I" STREET, SUITE C
LOS BANOS, CALIFORNIA 93635
T: 209.826.5155
F: 209.826.3307
www.aecom.com

CITY OF LOS BANOS
SAN LUIS AND PLACE ROAD
STORMDRAIN PIPELINE AND BASIN

MISCELLANEOUS DETAILS

REGISTERED PROFESSIONAL ENGINEER
GARY W. ROGERS
No. 32121
CIVIL
STATE OF CALIFORNIA

PROJECT NO:	60188586
CAD DWG FILE:	C-114
DESIGNED BY:	G.W.R.
DRAWN BY:	D.M.M.
DEPT CHECK:	G.W.R.
PROJ CHECK:	
DATE:	5/9/2011
SCALE:	AS SHOWN

C-114

SHEET 16 OF 41

PATH/FILENAME: \\VIGLER1FP001\DATA\PROJECTS\CLIENT60188586-SAN_LUIS_PLACE_SD\400-TECHNICAL\406-CIVIL\001\CAD\PLAN_SET\C-114.DWG
LAST UPDATE: Friday, May 06, 2011 11:58:53 AM PLOT DATE: Monday, May 09, 2011 10:53:54 AM
ANSI D – 6-May-11

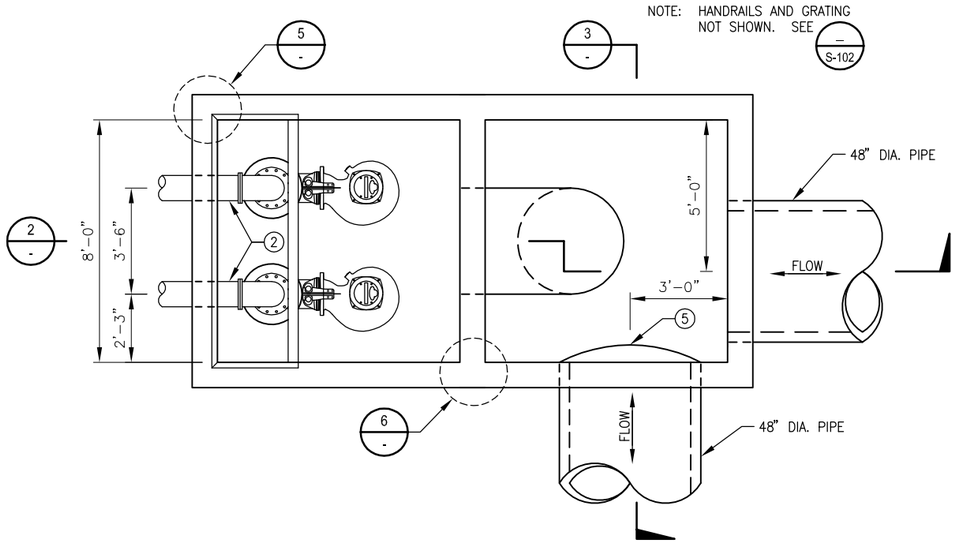

PLAN 1

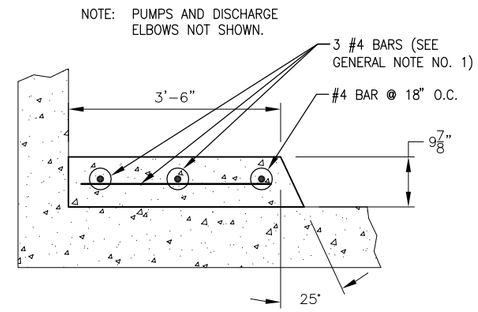

PUMP SUPPORT 4

ESTIMATED QUANTITIES

REINFORCED CONCRETE	50 C.Y.
REINFORCING STEEL	8,500 LBS.
MISCELLANEOUS METAL	800 LBS.
48-INCH SLIDE GATE	1 EA.

CONSTRUCTION NOTES

1. SUBMERSIBLE PUMP WITH DISCHARGE HEAD
2. 10-INCH DIA. DUCTILE IRON DISCHARGE PIPE
3. 42-INCH STEEL FABRICATED ELBOW
4. W 4x13 FOR GRATING AND UPPER GUIDE BAR BRACKET SUPPORT CAST INTO STRUCTURE. LENGTH 8'-8". BOLT BRACKETS TO W4x13 AS RECOMMENDED BY PUMP MANUFACTURER.
5. 48-INCH SLIDE GATE
6. ELEV. 92.5 LEAD PUMP OFF
7. ELEV. 95.4 LEAD PUMP ON
8. ELEV. 96.0 LAG PUMP OFF
9. ELEV. 100.0 LAG PUMP ON
10. ELEV. 108.5 HIGH WATER ALARM

GENERAL NOTES

1. PLACE REINFORCING STEEL SO AS NOT TO INTERFERE WITH ANCHOR BOLTS FOR PUMP DISCHARGE HEADS.
2. SEE S-102 FOR ADDITIONAL GENERAL NOTES.

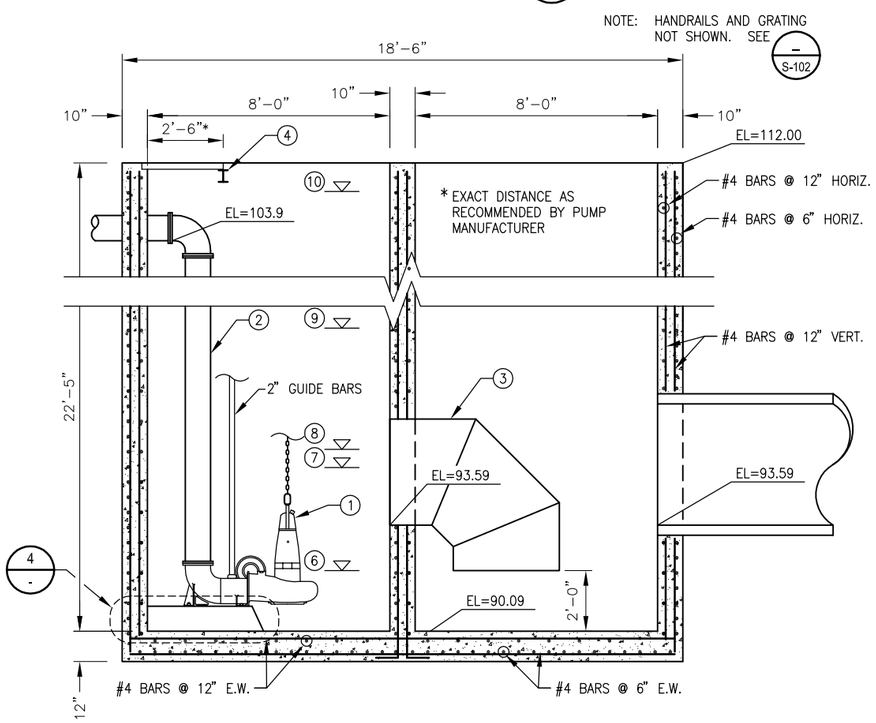

STRUCTURE SECTION 2

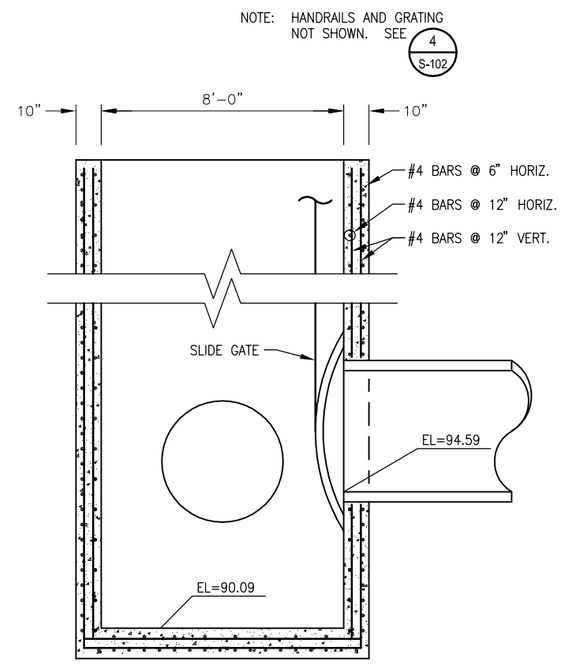

STRUCTURE SECTION 3

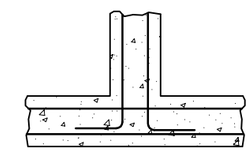

REINFORCING DETAIL 6

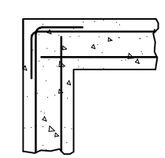

REINFORCING DETAIL 5

REGISTERED PROFESSIONAL ENGINEER
GARY W. ROGERS
No. 32121
CIVIL
STATE OF CALIFORNIA

MARK	DATE	MADE BY	CHECKED	DESCRIPTION

REVISIONS

AECOM
AECOM
1120 WEST "I" STREET, SUITE C
LOS BANOS, CALIFORNIA 93635
T: 209.826.5155
F: 209.826.3307
www.aecom.com

CITY OF LOS BANOS
SAN LUIS AND PLACE ROAD
STORMDRAIN PIPELINE AND BASIN

PUMP STRUCTURE

PROJECT NO:	60188586
CAD DWG FILE:	S-101
DESIGNED BY:	G.W.R.
DRAWN BY:	D.M.M.
DEPT CHECK:	G.W.R.
PROJ CHECK:	
DATE:	5/6/2011
SCALE:	AS SHOWN

S-101

SHEET 17 OF 41

PATH/FILENAME: \\US.BEFTP001\DATA\PROJECTS\CLIP\60188586-SAN_LUIS_PLACE_SSV\400-TECHNICAL\406-CIVIL\001\CAD\PLAN_SETS-101.DWG
LAST UPDATE: Thursday, May 05, 2011 11:28:55 AM
PLOT DATE: Friday, May 06, 2011 10:15:29 AM
ANSI D - 5-May-11

NOTE: PUMPS AND DISCHARGE NOT SHOWN.

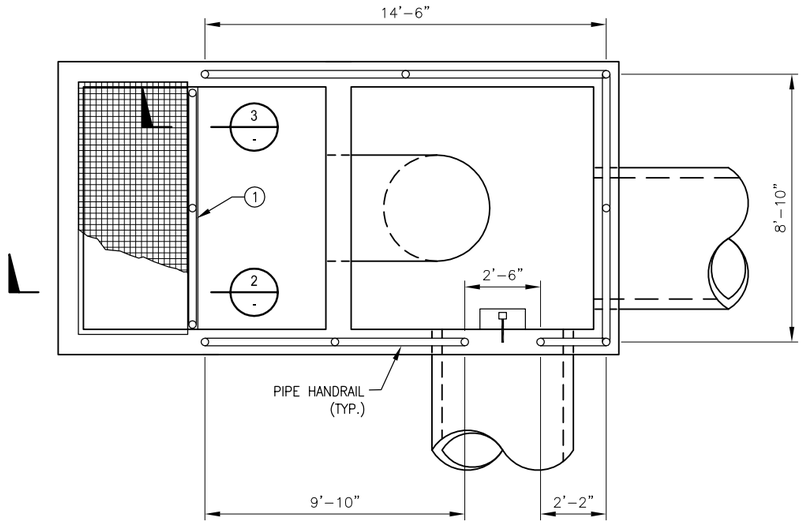

GRATING AND HANDRAIL PLAN (1 / -)

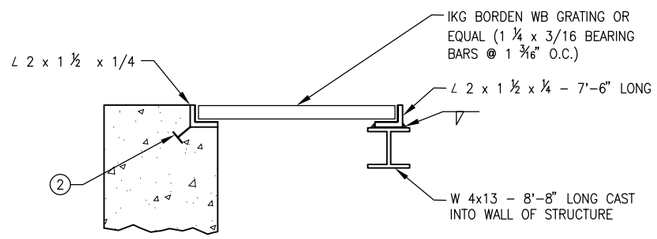

GRATING AND PUMP GUIDE BRACKET SUPPORT (2 / -)

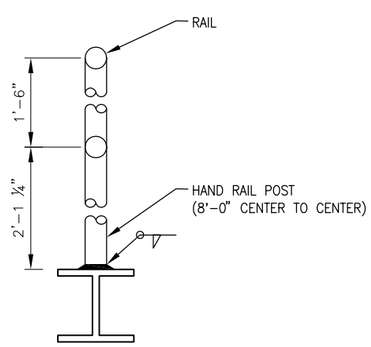

HANDRAIL POST ATTACHMENT TO W 4x13 (3 / -)

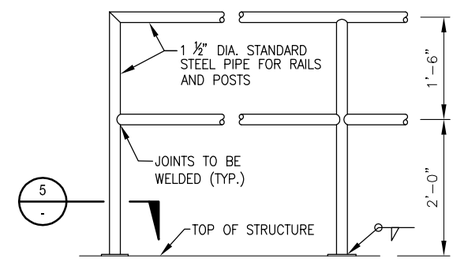

PIPE HANDRAILS (TOP OF STRUCTURE) (4 / -)

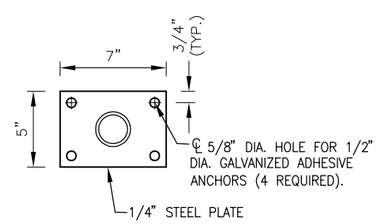

POST CONNECTION DETAIL (5 / -)

CONSTRUCTION NOTES

1. LENGTH OF PIPE HANDRAIL SECTION 7'-9"
2. 1/2-INCH DIA. HEX BOLTS – 3" LONG WELDED TO GRATING SUPPORT ANGLE. MAX. SPACING BETWEEN BOLTS 24 INCHES.

GENERAL NOTES

CONCRETE:

1. MINIMUM 28 DAYS COMPRESSIVE STRENGTH OF CONCRETE SHALL BE 4,000 PSI.
2. CHAMFER ALL EXPOSED CORNERS 1"±, HAUNCH ALL INTERIOR CORNERS 1"±.
3. ALL REINFORCING BAR BENDS SHALL HAVE A MINIMUM RADIUS OF 4 TIMES THE BAR DIAMETER.
4. ALL REINFORCING BAR SPLICES SHALL BE LAPPED 40 BAR DIAMETER UNLESS OTHERWISE SHOWN.
5. REINFORCING TO BE PLACED AS FOLLOWS: PLACE AT CENTER WHERE ONE MAT OF STEEL IS INDICATED; WHERE TWO MATS OF STEEL, #5 BARS AND SMALLER SHALL HAVE 1-1/2" OF COVER AND #6 BARS AND LARGER SHALL HAVE 2" OF COVER. ALL BARS IN FLOORS SHALL HAVE 3" CLEAR BETWEEN THEM AND GROUND SURFACE UNLESS OTHERWISE SHOWN.
6. REINFORCING STEEL SHALL CONFORM TO ASTM DESIGNATION A615 GRADE 60 BILLET STEEL BARS.
7. INSTALL REINFORCING BAR CIRCULAR RINGS AROUND ALL PIPES AS SHOWN. SIZE OF RING TO BE EQUAL TO THE LARGEST BAR SIZE IN WALL. DIAMETER OF RING TO BE O.D. OF PIPE PLUS 6". (OTHERWISE NOTED AS BAR HOOP.)

MISCELLANEOUS METAL:

1. ALL MISCELLANEOUS METAL SHALL BE A36 STEEL.
2. ALL WELDS WILL BE MADE WITH E70XX ELECTRODES. FULL PENETRATION WELDS.
3. USE STAINLESS STEEL ANCHOR BOLTS AND WEDGE ANCHORS.
4. ALL MISCELLANEOUS METAL SHALL BE HOT DIPPED GALVANIZED, UNLESS OTHERWISE NOTED.

REGISTERED PROFESSIONAL ENGINEER
GARY W. ROGERS
No. 32121
CIVIL
STATE OF CALIFORNIA

MARK	DATE	MADE BY	CHECKED	DESCRIPTION

REVISIONS

AECOM
AECOM
1120 WEST "I" STREET, SUITE C
LOS BANOS, CALIFORNIA 93635
T: 209.826.5155
F: 209.826.3307
www.aecom.com

CITY OF LOS BANOS
SAN LUIS AND PLACE ROAD
STORMDRAIN PIPELINE AND BASIN
PUMP STRUCTURE
MISCELLANEOUS DETAILS

PROJECT NO:	60188586
CAD DWG FILE:	S-102
DESIGNED BY:	G.W.R.
DRAWN BY:	D.M.M.
DEPT CHECK:	G.W.R.
PROJ CHECK:	
DATE:	5/6/2011
SCALE:	AS SHOWN

S-102

SHEET 18 OF 41

PATH/FILENAME: \\US.BEC\FP001\DATA\PROJECTS\CLB\60188586-SAN_LUIS_PLACE_SD\400-TECHNICAL\406-CIVIL\001\CAD\PLAN_SET\S-102.DWG
LAST UPDATE: Thursday, May 05, 2011 11:25:44 AM PLOT DATE: Friday, May 06, 2011 10:19:10 AM
ANSI D – 5-May-11

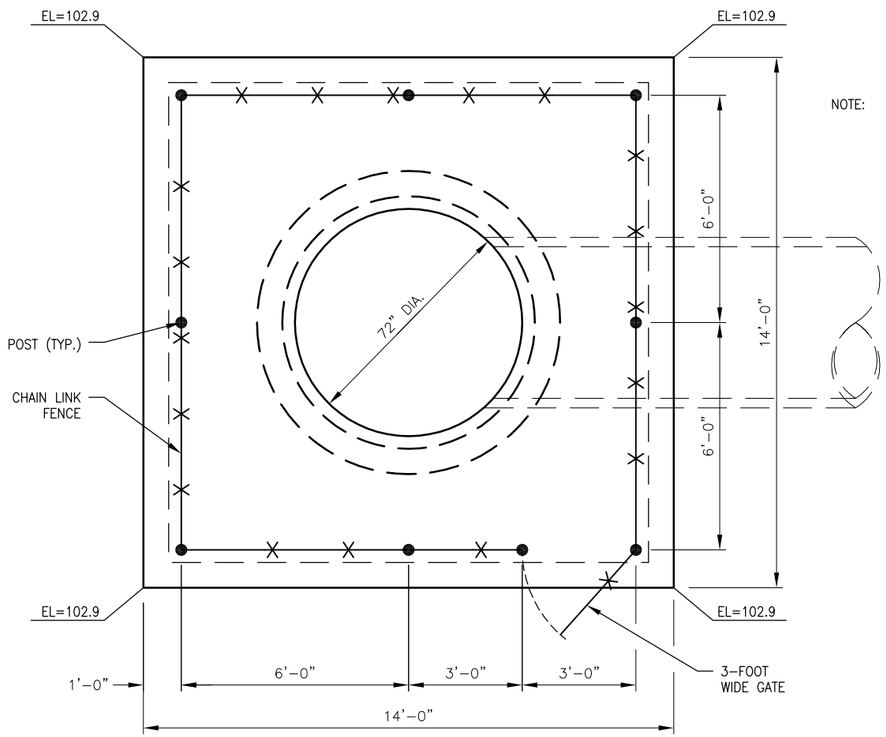

NOTE: 3-INCH AND 10-INCH DRAINAGE PIPES NOT SHOWN. SEE C-108

PLAN - INLET/OUTLET (1 / -)

GENERAL NOTES

1. PROVIDE A LIGHT BROOM FINISH ON THE INLET/OUTLET SLAB.
2. BOTTOM OF CHAIN LINK FENCING SHALL BE FLUSH WITH BOTTOM RAIL.
3. SEE S-102 FOR ADDITIONAL GENERAL NOTES.

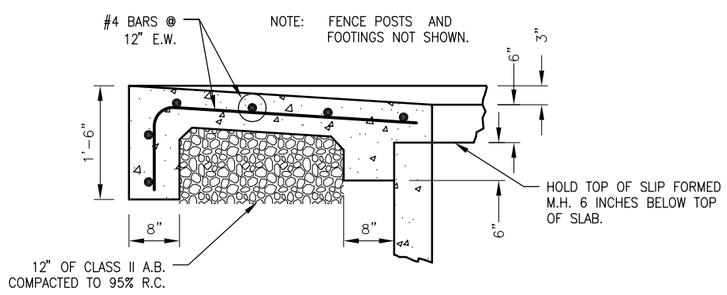

SLAB AND FOOTING DETAIL (3 / -)

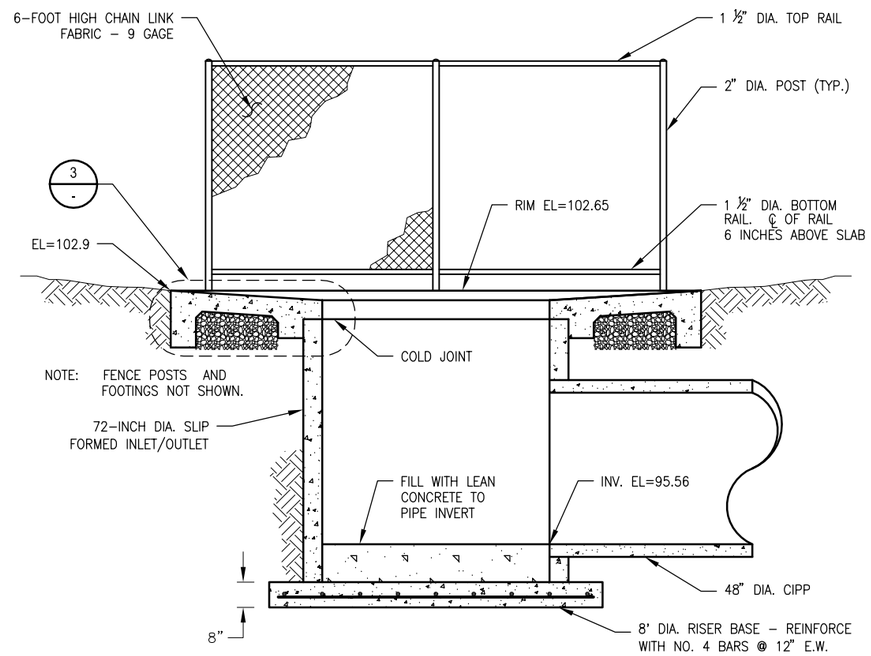

SECTION - INLET/OUTLET (2 / -)

REGISTERED PROFESSIONAL ENGINEER
GARY W. ROGERS
No. 32121
CIVIL
STATE OF CALIFORNIA

MARK	DATE	MADE BY	CHECKED	DESCRIPTION

REVISIONS

AECOM
AECOM
1120 WEST "T" STREET, SUITE C
LOS BANOS, CALIFORNIA 93635
T: 209.826.5155
F: 209.826.3307
www.aecom.com

CITY OF LOS BANOS
SAN LUIS AND PLACE ROAD
STORMDRAIN PIPELINE AND BASIN

INLET/OUTLET STRUCTURE

PROJECT NO:	60188586
CAD DWG FILE:	S-103
DESIGNED BY:	G.W.R.
DRAWN BY:	D.M.M.
DEPT CHECK:	G.W.R.
PROJ CHECK:	
DATE:	5/6/2011
SCALE:	AS SHOWN

S-103

SHEET 19 OF 41

PATH/FILENAME: \\US.BEFP001.DATA\PROJECTS\CLIEN\60188586-SAN_LUIS_PLACE_SDV\400-TECHNICAL\406-CIVIL\001\CAD\PLAN_SET\S-103.DWG
PLOT DATE: Friday, May 06, 2011 10:20:01 AM
LAST UPDATE: Friday, May 06, 2011 8:27:35 AM
ANSI D - 6-May-11

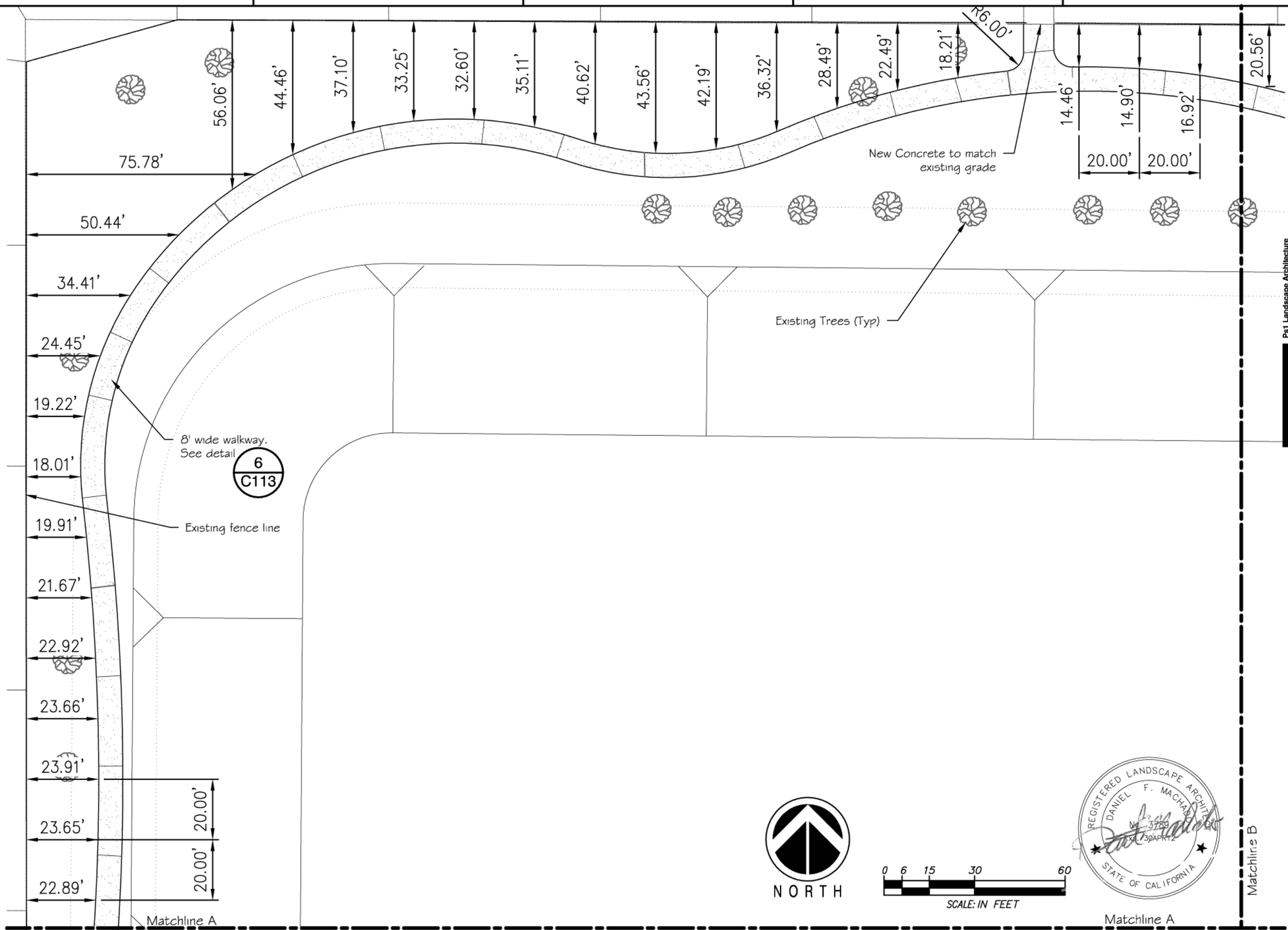

REGISTERED LANDSCAPE ARCHITECT
DANIEL F. MACHADO
No. 3769
30APR12
STATE OF CALIFORNIA

Ps1 Landscape Architecture
816 Hampshire Court
Modesto, CA 95350
T 209.544.3994

Ps1LA

AECOM

AECOM
1120 WEST "I" STREET, SUITE C
LOS BANOS, CALIFORNIA 93635
T: 209.826.5155
F: 209.826.3307
www.aecom.com

MARK	DATE	MADE BY	CHECKED	DESCRIPTION

REVISIONS

CITY OF LOS BANOS
SAN LUIS AND PLACE ROAD
STORMDRAIN PIPELINE AND BASIN

Layout Plan

PROJECT NO:	60188586
CAD DWG FILE:	129-10 CD LAYOUT
DESIGNED BY:	DFM
DRAWN BY:	DFM
DEPT CHECK:	
PROJ CHECK:	
DATE:	5/6/2011
SCALE:	

L101

SHEET 20 OF 41

PATH/FILENAME: _fldd 2124681848
LAST UPDATE: Thursday, May 05, 2011 8:26:58 PM
PLOT DATE: Friday, May 06, 2011 1:50:33 PM
ANSI D – 5-May-11

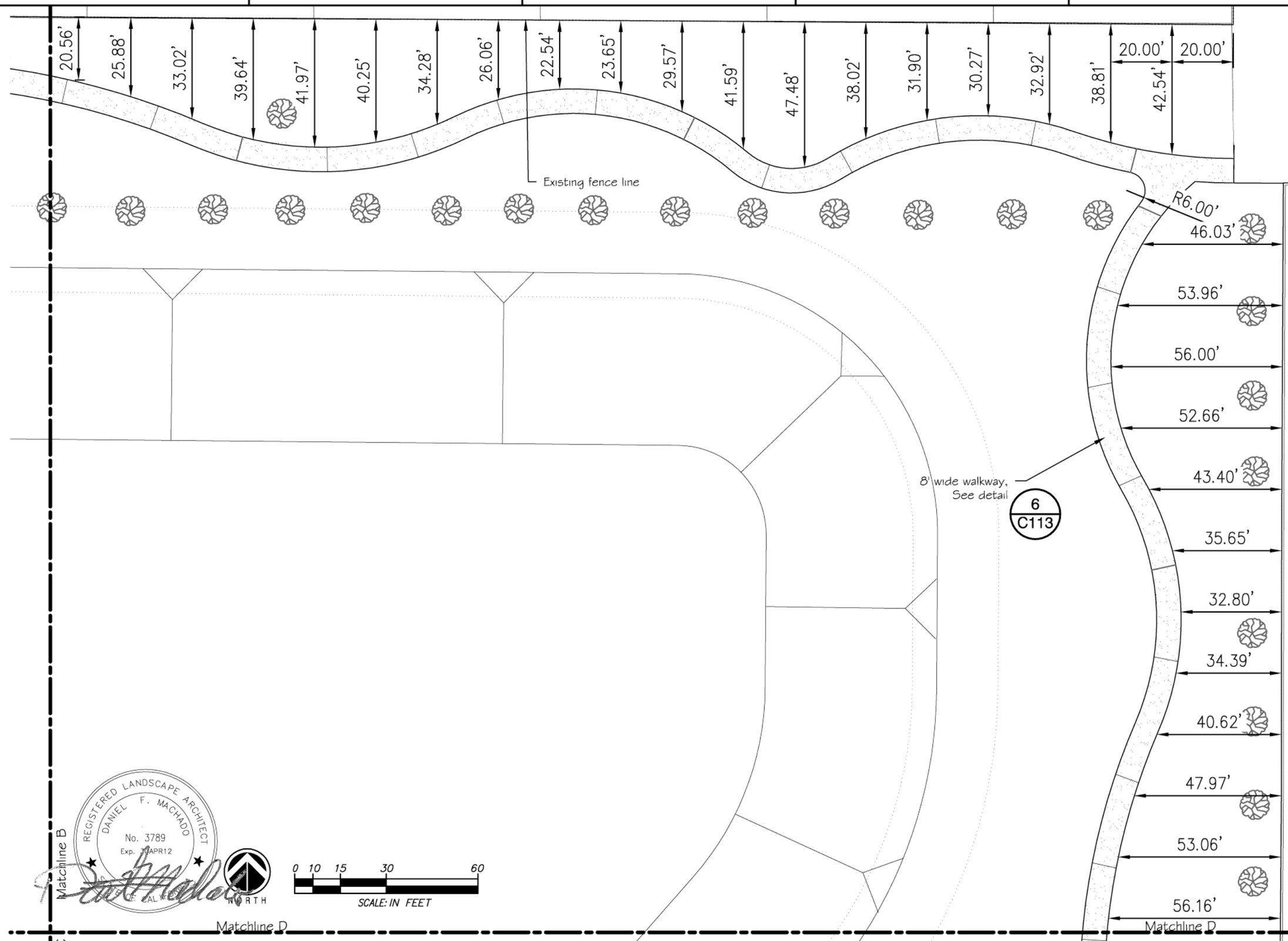

Ps1 Landscape Architecture
816 Hampshire Court
Modesto, CA 95350
T 209.544.3994

Ps1LA

AECOM

AECOM
1120 WEST "I" STREET, SUITE C
LOS BANOS, CALIFORNIA 93635

T: 209.826.5155
F: 209.826.3307
www.aecom.com

MARK	DATE	MADE BY	CHECKED	DESCRIPTION

REVISIONS

CITY OF LOS BANOS
SAN LUIS AND PLACE ROAD
STORMDRAIN PIPELINE AND BASIN

Layout Plan

PROJECT NO:	60188586
CAD DWG FILE:	129-10 CD Layout
DESIGNED BY:	DFM
DRAWN BY:	DFM
DEPT CHECK:	
PROJ CHECK:	
DATE:	5/6/2011
SCALE:	

L102

SHEET 21 OF 41

PATH/FILENAME: _Fold 2124681948
LAST UPDATE: Thursday, May 05, 2011 9:29:58 PM
PLOT DATE: Friday, May 06, 2011 2:30:11 PM
ANSI D – 5-May-11

Matchline A

Matchline A

Matchline C

Existing fence line

8' wide walkway.
See detail 6 / C113

21.42'

19.76'

19.98'

22.14'

26.31'

32.62'

40.74'

46.83'

50.35'

51.45'

50.25'

46.66'

109.58'

40.49'

31.52'

R20.00'

R20.00'

R20.00'

R10.00'

R80.00'

110.50' Radius

R8.00'

20.00'

20.00'

44.12'

18.96'

Min 8' clear of fence, hold parallel to edge of basin

DAY CARE CENTER

BFP

0 6 15 30 60

SCALE: IN FEET

NORTH

REGISTERED LANDSCAPE ARCHITECT
DANIEL F. MACHADO
No. 3789
Exp. 30APR12
CAL

Matchline C

Ps1 Landscape Architecture
816 Hampshire Court
Modesto, CA 95350
T 209.544.3994

Ps1LA

AECOM

AECOM
1120 WEST "I" STREET, SUITE C
LOS BANOS, CALIFORNIA 93635

T: 209.826.5155
F: 209.826.3307
www.aecom.com

MARK	DATE	MADE BY	CHECKED	DESCRIPTION

REVISIONS

CITY OF LOS BANOS
SAN LUIS AND PLACE ROAD
STORMDRAIN PIPELINE AND BASIN

Layout Plan

PROJECT NO:	60188586
CAD DWG FILE:	129-10 CD LAYOUT
DESIGNED BY:	DIM
DRAWN BY:	DIM
DEPT CHECK:	
PROJ CHECK:	
DATE:	5/6/2011
SCALE:	

L103

SHEET 22 OF 41

PATH/FILENAME: _Field 2124681946
LAST UPDATE: Thursday, May 05, 2011 6:26:56 PM
PLOT DATE: Friday, May 06, 2011 2:01:31 PM
ANSI D – 5-May-11

Matchline D

Matchline C

This area see Detail 1, Sheet L120

New walkways shall begin at corner of existing concrete.

Existing Concrete

2
L112

8' wide walkway, See detail

6
C113

DAY CARE CENTER

PARKING LOT

Well Bldg

Existing Concrete

NORTH

0 6 15 30 60

SCALE: IN FEET

2 SEWER LINES

REGISTERED LANDSCAPE ARCHITECT
DANIEL F. MACHADO
No. 3789
Exp. 30APR12
STATE OF CALIFORNIA

Ps1 Landscape Architecture
816 Hampshire Court
Modesto, CA 95350
T 209.544.3994

Ps1LA

AECOM

AECOM
1120 WEST "I" STREET, SUITE C
LOS BANOS, CALIFORNIA 93635

T: 209.826.5155
F: 209.826.3307
www.aecom.com

MARK	DATE	MADE BY	CHECKED	DESCRIPTION

REVISIONS

CITY OF LOS BANOS
SAN LUIS AND PLACE ROAD
STORMDRAIN PIPELINE AND BASIN

Layout Plan

PROJECT NO:	60188586
CAD DWG FILE:	129-10 CD LAYOUT
DESIGNED BY:	DFM
DRAWN BY:	DFM
DEPT CHECK:	
PROJ CHECK:	
DATE:	5/6/2011
SCALE:	

L104

SHEET 23 OF 41

PATH/FILENAME: \\fsbd 212485194\
LAST UPDATE: Friday, May 06, 2011 3:00:44 PM
PLOT DATE: Friday, May 06, 2011 3:01:12 PM
ANSI D - 6-May-11

Note: Hold rotors min 1'-0" away from existing fence line

Matchline A

Matchline A

0 6 15 30 60

SCALE: IN FEET

NORTH

REGISTERED LANDSCAPE ARCHITECT
DANIEL F. MACHADO
No. 3789
Exp. 30APR12
STATE OF CALIFORNIA

Ps1 Landscape Architecture
816 Hampshire Court
Modesto, CA 95350
T 209.544.3994

Ps1LA

AECOM

AECOM
1120 WEST "I" STREET, SUITE C
LOS BANOS, CALIFORNIA 93635

T: 209.826.5155
F: 209.826.3307
www.aecom.com

MARK	DATE	MADE BY	CHECKED	DESCRIPTION

REVISIONS

CITY OF LOS BANOS
SAN LUIS AND PLACE ROAD
STORMDRAIN PIPELINE AND BASIN

Irrigation Plan

PROJECT NO:	60188586
CAD DWG FILE:	129-10 CD IWRM A
DESIGNED BY:	DFM
DRAWN BY:	DFM
DEPT CHECK:	
PROJ CHECK:	
DATE:	5/6/2011
SCALE:	

L105

SHEET 24 OF 41

PATH/FILENAME: \\fldd 2124681948
LAST UPDATE: Friday, May 06, 2011 3:56:38 PM
PLOT DATE: Friday, May 06, 2011 3:56:54 PM
ANSI D - 6-May-11

Note: Hold rotors min 1'-0" away from existing fence line

Matchline B

Matchline D

Matchline A

0 6 15 30 60

SCALE: IN FEET

NORTH

REGISTERED LANDSCAPE ARCHITECT
DANIEL F. MACHADO
No. 3789
STATE OF CALIFORNIA

MARK	DATE	MADE BY	CHECKED	DESCRIPTION

REVISIONS

Ps1 Landscape Architecture
816 Hampshire Court
Modesto, CA 95350
T 209.544.3994

Ps1LA

AECOM

AECOM
1120 WEST "I" STREET, SUITE C
LOS BANOS, CALIFORNIA 93635
T: 209.826.5155
F: 209.826.3307
www.aecom.com

CITY OF LOS BANOS

SAN LUIS AND PLACE ROAD
STORMDRAIN PIPELINE AND BASIN

Irrigation Plan

PROJECT NO:	60188586
CAD DWG FILE:	129-10 CD IRRIG A
DESIGNED BY:	DFM
DRAWN BY:	DFM
DEPT CHECK:	
PROJ CHECK:	
DATE:	5/6/2011
SCALE:	

L106

SHEET 25 OF 41

PATH/FILENAME: \\fldd 2124681848
LAST UPDATE: Friday, May 06, 2011 3:56:38 PM
PLOT DATE: Friday, May 06, 2011 3:56:11 PM
ANSI D - 6-May-11

Matchline A

Matchline C

DAY CARE CENTER

Existing fence at Child Care Center

Shovel-cut edge at perimeter of hydroseed.

Existing Backflow Preventer (not part of new project)

Existing Driveway at Sidewalk

BFP

SCALE: IN FEET

0 6 15 30 60

NORTH

REGISTERED LANDSCAPE ARCHITECT
DANIEL F. MACHADO
No. 3789
Exp. 30APR12
STATE OF CALIFORNIA

Ps1 Landscape Architecture
816 Hampshire Court
Modesto, CA 95350
T 209.544.3994

Ps1LA

AECOM

AECOM
1120 WEST "I" STREET, SUITE C
LOS BANOS, CALIFORNIA 93635
T: 209.826.5155
F: 209.826.3307
www.aecom.com

MARK	DATE	MADE BY	CHECKED	DESCRIPTION

REVISIONS

CITY OF LOS BANOS
SAN LUIS AND PLACE ROAD
STORMDRAIN PIPELINE AND BASIN

Irrigation Plan

PROJECT NO: 60188586
CAD DWG FILE: 129-10 CD IRRIG A
DESIGNED BY: DFM
DRAWN BY: DFM
DEPT CHECK:
PROJ CHECK:
DATE: 5/6/2011
SCALE:

L107

SHEET 26 OF 41

PATH/FILENAME: _Fold 2124681948
LAST UPDATE: Friday, May 06, 2011 2:26:16 PM
PLOT DATE: Friday, May 06, 2011 2:45:17 PM
ANSI D - 6-May-11

Matchline D

Matchline A

Matchline C

DAY CARE CENTER

PARKING LOT

Place Backflow device and Pump on concrete pad.

Well Bldg

Existing 10" water line

Point of Connection, See Civil Plans

NORTH

SCALE: IN FEET

0 6 15 30 60

2 SEWER LINES

REGISTERED LANDSCAPE ARCHITECT
DANIEL F. MACHADO
No. 3789
Exp. 30APR12
STATE OF CALIFORNIA

Ps1 Landscape Architecture
816 Hampshire Court
Modesto, CA 95350
T 209.544.3994

Ps1LA

AECOM

AECOM
1120 WEST "I" STREET, SUITE C
LOS BANOS, CALIFORNIA 93635

T: 209.826.5155
F: 209.826.3307
www.aecom.com

MARK	DATE	MADE BY	CHECKED	DESCRIPTION

REVISIONS

CITY OF LOS BANOS
SAN LUIS AND PLACE ROAD
STORMDRAIN PIPELINE AND BASIN

Irrigation Plan

PROJECT NO:	60188586
CAD DWG FILE:	129-10 CD IRRIG A
DESIGNED BY:	DFM
DRAWN BY:	DFM
DEPT CHECK:	
PROJ CHECK:	
DATE:	5/6/2011
SCALE:	

L108

SHEET 27 OF 41

PATH/FILENAME: \\fsld 2124681846
LAST UPDATE: Friday, May 06, 2011 2:26:16 PM
PLOT DATE: Friday, May 06, 2011 2:46:00 PM
ANSI D – 6-May-11

IRRIGATION SCHEDULE

SYMBOL	MANUFACTURER/MODEL/DESCRIPTION	PSI	DETAIL
15 15 15 15 15 15 Q T H TT TQ F	Rain Bird 1806 15 Series MPR Turf Spray 6" popup.	30	
4 6 8 10 12 15 17 4 6 8 10 12 15 17	Rain Bird 1806 ADJ Turf Spray 6" popup.	30	

SYMBOL	MANUFACTURER/MODEL/DESCRIPTION	PSI	GPM	RADIUS
08	Rain Bird F4-PC, FC-SS Turf Rotor, 4" popup, adjustable and full circle, with stainless steel riser	70	8.90	43'
16	Rain Bird F4-PC, FC-SS Turf Rotor, 4" popup, adjustable and full circle, with stainless steel riser	70	16.9	53'

SYMBOL	MANUFACTURER/MODEL/DESCRIPTION	QTY
	Rain Bird 300-BPES-PRS-D Electric Remote Control Valve, scrubber mechanism, pressure regulator	20
	Rain Bird 5LRC 1" Quick Coupler Valve, in round valve box with lid.	2
	Nibco T-113 Bronze gate shut off valve, line size, in round valve box with lid.	2
BF	Febco 825YD 4" Reduced Pressure Backflow Preventer. Use `StrongBox` by V.I.T. Products insulated two-piece stainless steel enclosure. Confirm finished installed dimensions of backflow device prior to ordering. (800) 729-1314.	1
C	Rain Bird ESP-32MC Irrigation Controller, 32 stations. Use `StrongBox` by V.I.T Products stainless steel pedestal enclosure. (800) 729-1314. See Civil Plans for placement information.	1
R	Rain Bird Rain Check Rain shut-off switch. Mount on well building, run wires in 1" PVC Sch80 conduit.	1
F	Flow Meter, See Civil Plans	1
P	Watertronics Booster Pump Model # CLTBV-2-20-240-3-220-74. Contact Phil Vangene @ Jack Prust Sales (925) 250-5885 for specific information.	1
POC	Point of Connection 4" See Civil Plans.	1
————	Irrigation Lateral Line: PVC Class 200 PVC Class 200 irrigation pipe. Only lateral transition pipe sizes 1" and above are indicated on the plan, with all others being 3/4" in size.	10,557 l.f.
- - - - - -	Irrigation Mainline: PVC C900 Class 200	1,846 l.f.

Valve Callout

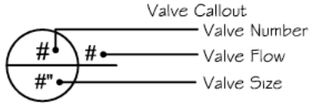

CRITICAL ANALYSIS

Generated:	2011-05-05 14:21
P.O.C. NUMBER:01	
Water Source Information:	Water Meter installed by others. See Civil Plans.
FLOW AVAILABLE	
Point of Connection Size:	4"
Flow Available:	298.00 gpm
PRESSURE AVAILABLE	
Static Pressure at POC:	50.00 psi
Booster Pump pressure provided:	70.00 psi
Pressure Available:	120.00 psi
DESIGN ANALYSIS	
Maximum Station Flow:	202.80 gpm
Flow Available at POC:	298.00 gpm
Residual Flow Available:	95.20 gpm
Pressure Req. at Critical Station:	79.35 psi
Loss for Fittings:	0.28 psi
Loss for Main Line:	1.88 psi
Loss for POC to Valve Elevation:	0.00 psi
Loss for Backflow:	11.00 psi
Critical Station Pressure at POC:	92.51 psi
Pressure Available:	120.00 psi
Residual Pressure Available:	27.49 psi

REGISTERED LANDSCAPE ARCHITECT
DANIEL F. MACHADO
No. 3789
EXP. 30 APR 11
STATE OF CALIFORNIA

Ps1 Landscape Architecture
816 Hampshire Court
Modesto, CA 95350
T 209.544.3994

Ps1LA

AECOM
AECOM
1120 WEST "I" STREET, SUITE C
LOS BANOS, CALIFORNIA 93635
T: 209.826.5155
F: 209.826.3307
www.aecom.com

MARK	DATE	MADE BY	CHECKED	DESCRIPTION

REVISIONS

CITY OF LOS BANOS
SAN LUIS AND PLACE ROAD
STORMDRAIN PIPELINE AND BASIN

Irrigation Schedule

PROJECT NO: 60188586
CAD DWG FILE: 129-10 CD IMPRO A
DESIGNED BY: DFM
DRAWN BY: DFM
DEPT CHECK:
PROJ CHECK:
DATE: 5/6/2011
SCALE:

L109

SHEET 28 OF 41

PLOT DATE: Friday, May 06, 2011 4:03:56 PM
PATH/FILENAME: _fsd2 212481846
LAST UPDATE: Friday, May 06, 2011 4:03:34 PM
ANSI D - 6-May-11

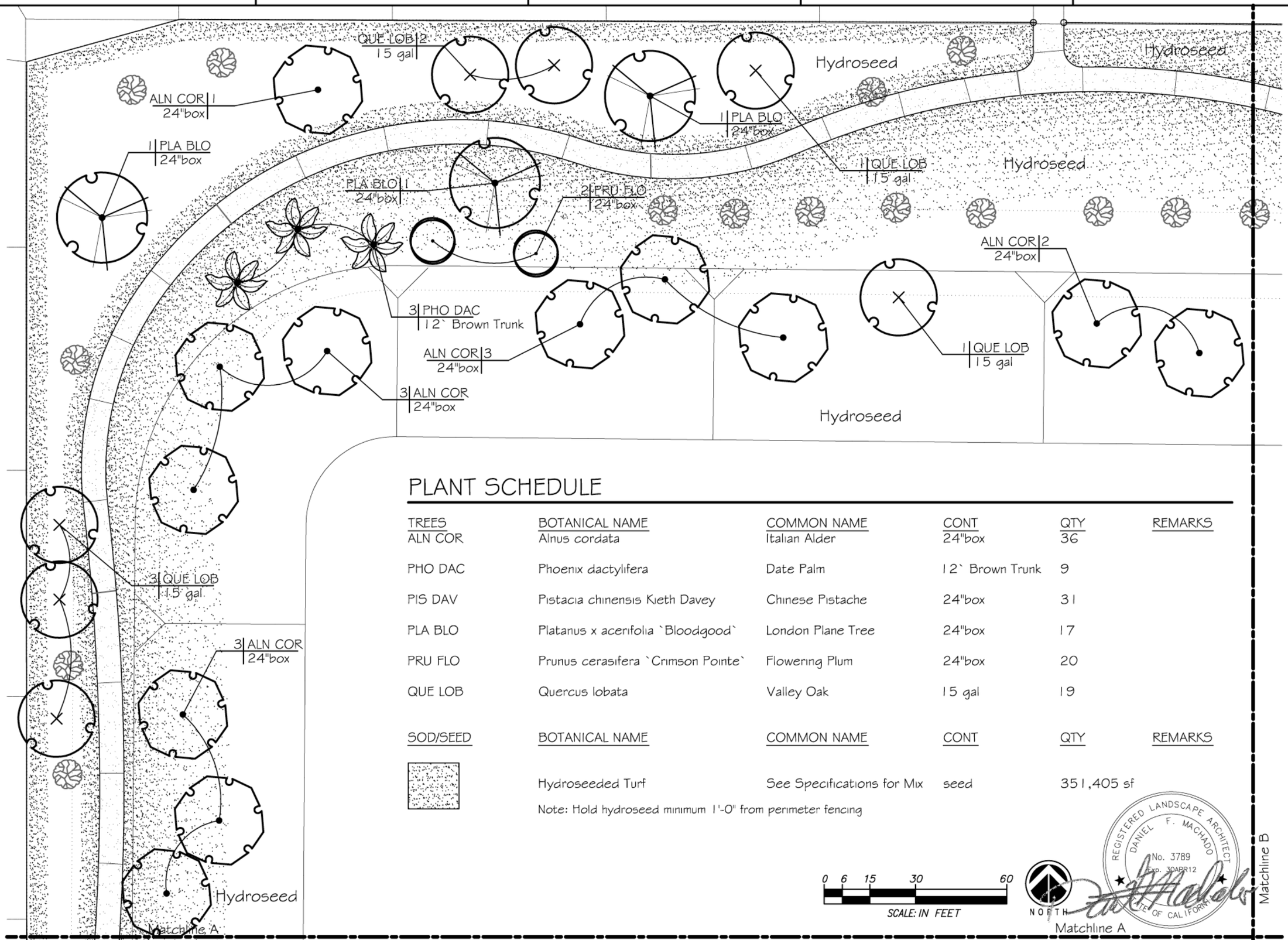

PLANT SCHEDULE

TREES	BOTANICAL NAME	COMMON NAME	CONT	QTY	REMARKS
ALN COR	Alnus cordata	Italian Alder	24"box	36	
PHO DAC	Phoenix dactylifera	Date Palm	12` Brown Trunk	9	
PIS DAV	Pistacia chinensis Kieth Davey	Chinese Pistache	24"box	31	
PLA BLO	Platanus x acerifolia `Bloodgood`	London Plane Tree	24"box	17	
PRU FLO	Prunus cerasifera `Crimson Pointe`	Flowering Plum	24"box	20	
QUE LOB	Quercus lobata	Valley Oak	15 gal	19	

SOD/SEED	BOTANICAL NAME	COMMON NAME	CONT	QTY	REMARKS
	Hydroseeded Turf	See Specifications for Mix	seed	351,405 sf	

Note: Hold hydroseed minimum 1'-0" from perimeter fencing

0 6 15 30 60
SCALE: IN FEET

NORTH

REGISTERED LANDSCAPE ARCHITECT
DANIEL F. MACHADO
No. 3789
Exp. 30APR12
STATE OF CALIFORNIA

Ps1 Landscape Architecture
816 Hampshire Court
Modesto, CA 95350
T 209.544.3994

Ps1LA

AECOM

AECOM
1120 WEST "I" STREET, SUITE C
LOS BANOS, CALIFORNIA 93635
T: 209.826.5155
F: 209.826.3307
www.aecom.com

MARK	DATE	MADE BY	CHECKED	DESCRIPTION

REVISIONS

CITY OF LOS BANOS
SAN LUIS AND PLACE ROAD
STORM/DRAIN PIPELINE AND BASIN

Planting Plan

PROJECT NO: 60188586
CAD DWG FILE: 129-10 CD PLANTING
DESIGNED BY: DFM
DRAWN BY: DFM
DEPT CHECK:
PROJ CHECK:
DATE: 5/6/2011
SCALE:

L110

SHEET 29 OF 41

PATH/FILENAME: _Field 2124861948
LAST UPDATE: Friday, May 06, 2011 2:25:56 PM
PLOT DATE: Friday, May 06, 2011 2:46:16 PM
ANSI D – 6-May-11

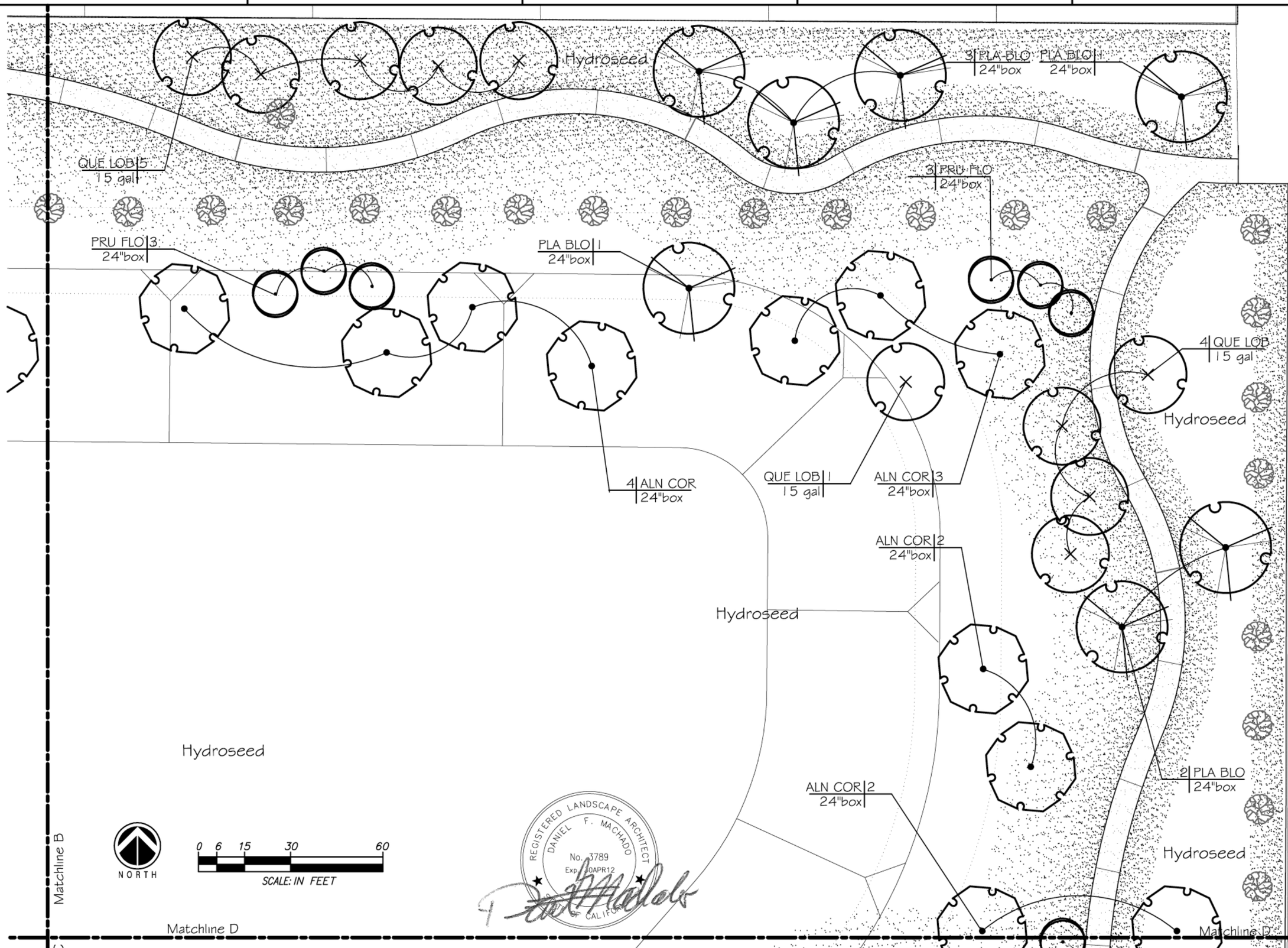

Ps1 Landscape Architecture
816 Hampshire Court
Modesto, CA 95350
T 209.544.3994

Ps1LA

MARK	DATE	MADE BY	CHECKED	DESCRIPTION

REVISIONS

AECOM

AECOM
1120 WEST "I" STREET, SUITE C
LOS BANOS, CALIFORNIA 93635
T: 209.826.5155
F: 209.826.3307
www.aecom.com

CITY OF LOS BANOS
SAN LUIS AND PLACE ROAD
STORMDRAIN PIPELINE AND BASIN

Planting Plan

PROJECT NO:	60188586
CAD DWG FILE:	129-10 CD PLANTING
DESIGNED BY:	DFM
DRAWN BY:	DFM
DEPT CHECK:	
PROJ CHECK:	
DATE:	5/6/2011
SCALE:	

L111

SHEET 30 OF 41

PATH/FILENAME: _fldd 2124681848
LAST UPDATE: Friday, May 06, 2011 2:25:56 PM
PLOT DATE: Friday, May 06, 2011 2:46:56 PM
ANSI D – 6-May-11

Matchline A

Matchline C

1 | ALN COR
24"box

8 | PIS DAV
24"box

Hydroseed

2 | QUE LOB
15 gal

ALN COR | 1
24"box

5 | PIS DAV
24"box

2 | ALN COR
24"box

PRU FLO | 3
24"box

ALN COR | 2
24"box

2 | PHO DAC
12` Brown Trunk

1 | PRU FLO
24"box

DAY CARE
CENTER

PLA BLO | 1
24"box

3 | ALN COR
24"box

2 | PRU FLO
24"box

4 | PIS DAV
24"box

6 | PIS DAV
24"box

PIS DAV | 2
24"box

PLA BLO | 1
24"box

6 | PIS DAV
24"box

2 | PHO DAC
12` Brown Trunk

BFP

0 6 15 30 60
SCALE: IN FEET

NORTH

REGISTERED LANDSCAPE ARCHITECT
DANIEL F. MACHADO
No. 3789
STATE OF CALIFORNIA

Ps1 Landscape Architecture
816 Hampshire Court
Modesto, CA 95350
T 209.544.3994

Ps1LA

MARK	DATE	MADE BY	CHECKED	DESCRIPTION

REVISIONS

AECOM
T: 209.826.5155
F: 209.826.3307
www.aecom.com

AECOM
1120 WEST "I" STREET, SUITE C
LOS BANOS, CALIFORNIA 93635

CITY OF LOS BANOS
SAN LUIS AND PLACE ROAD
STORMDRAIN PIPELINE AND BASIN

Planting Plan

PROJECT NO:	60188586
CAD DWG FILE:	129-10 CD PLANTING
DESIGNED BY:	DFM
DRAWN BY:	DFM
DEPT CHECK:	
PROJ CHECK:	
DATE:	5/6/2011
SCALE:	

L112

SHEET 31 OF 41

PATH/FILENAME: \\hdd 212481848
LAST UPDATE: Friday, May 06, 2011 2:25:59 PM
PLOT DATE: Friday, May 06, 2011 2:49:34 PM
ANSI D – 5-May-11

Matchline D

Matchline C

Hydroseed

Hydroseed

Hydroseed

Hydroseed

Hydroseed

ALN COR 3
24"box

1 ALN COR
24"box

3 PRU FLO
24"box

1 PLA BLO
24"box

1 PRU FLO
24"box

1 PLA BLO
24"box

1 PRU FLO
24"box

PLA BLO 2
24"box

2 PHO DAC
12` Brown Trunk

DAY CARE
CENTER

PARKING
LOT

Well Bldg

NORTH

0 6 15 30 60

SCALE: IN FEET

2 SEWER LINES

REGISTERED LANDSCAPE ARCHITECT
DANIEL F. MACHADO
No. 3789
Exp. 30APR12
STATE OF CALIFORNIA

Ps1 Landscape Architecture
816 Hampshire Court
Modesto, CA 95350
T 209.544.3994

Ps1LA

AECOM

AECOM
1120 WEST "I" STREET, SUITE C
LOS BANOS, CALIFORNIA 93635

T: 209.826.5155
F: 209.826.3307
www.aecom.com

MARK	DATE	MADE BY	CHECKED	DESCRIPTION

REVISIONS

CITY OF LOS BANOS
SAN LUIS AND PLACE ROAD
STORMDRAIN PIPELINE AND BASIN

Planting Plan

PROJECT NO:	60188586
CAD DWG FILE:	129-10 CD PLANTING
DESIGNED BY:	DFM
DRAWN BY:	DFM
DEPT CHECK:	
PROJ CHECK:	
DATE:	5/6/2011
SCALE:	

L113

SHEET 32 OF 41

PATH/FILENAME: _field 2124681848
LAST UPDATE: Friday, May 06, 2011 2:25:59 PM
PLOT DATE: Friday, May 06, 2011 2:25:17 PM
ANSI D - 6-May-11

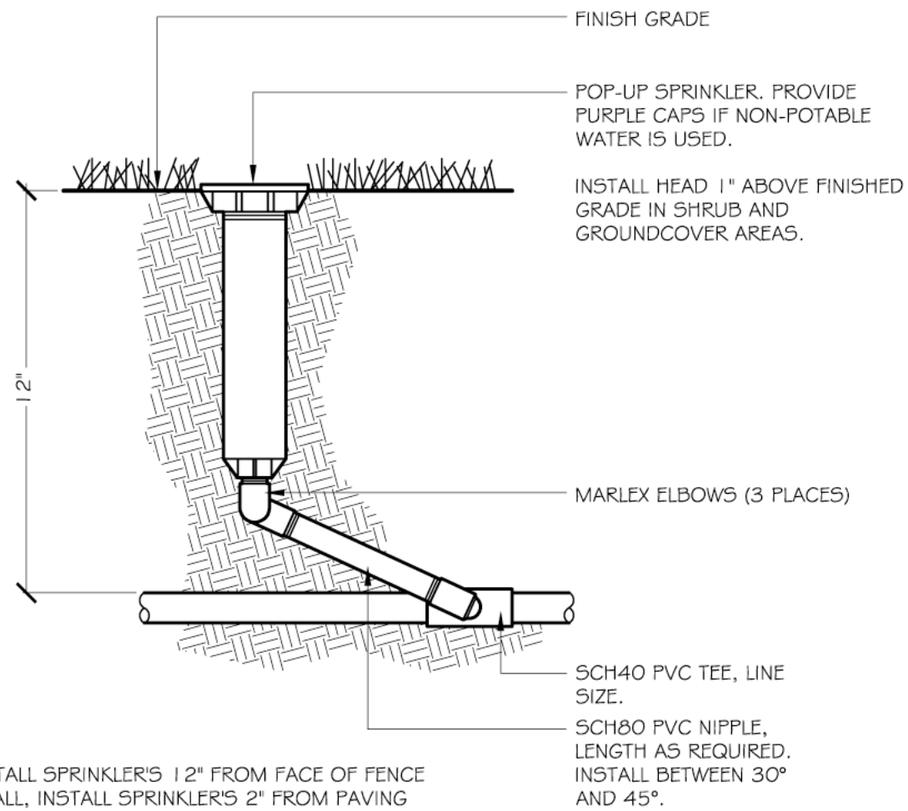

NOTE:
1. INSTALL SPRINKLER'S 12" FROM FACE OF FENCE OR WALL, INSTALL SPRINKLER'S 2" FROM PAVING EDGES
2. INSTALL SPRINKLERS PLUMB. ADJUST PATTERN TO COVER LANDSCAPE AREA WHILE MINIMIZING OVERSPRAY.

1 POP-UP DETAIL

NTS

328403.13-03

NOTES:

1. CENTER VALVE BOX OVER RCV TO FACILITATE SERVICING VALVE.
2. SET RCV AND VALVE BOX ASSEMBLY IN SHRUB AREA, TYP.

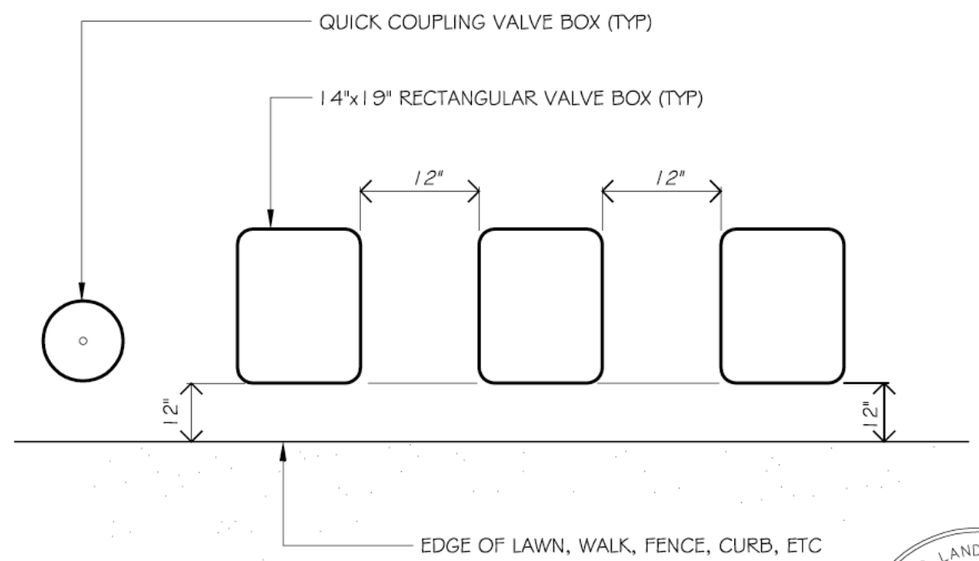

2 VALVE BOX LAYOUT

NTS

328406.13-05

Ps1 Landscape Architecture
816 Hampshire Court
Modesto, CA 95350
T 209.544.3994

Ps1LA

AECOM
AECOM
1120 WEST "I" STREET, SUITE C
LOS BANOS, CALIFORNIA 93635
T: 209.826.5155
F: 209.826.3307
www.aecom.com

MARK	DATE	MADE BY	CHECKED	DESCRIPTION

REVISIONS

CITY OF LOS BANOS
SAN LUIS AND PLACE ROAD
STORMDRAIN PIPELINE AND BASIN

Details

REGISTERED LANDSCAPE ARCHITECT
DANIEL F. MACHADO
No. 3789
Exp. 30APR12
STATE OF CALIFORNIA

PROJECT NO:	60188586
CAD DWG FILE:	129-10 CD DETAILS
DESIGNED BY:	DFM
DRAWN BY:	DFM
DEPT CHECK:	
PROJ CHECK:	
DATE:	5/6/2011
SCALE:	

L114

SHEET 33 OF 41

PATH/FILENAME: _field 2124681846
LAST UPDATE: Friday, May 06, 2011 7:35:00 AM
PLOT DATE: Friday, May 06, 2011 8:38:07 AM
ANSI D - 6-May-11

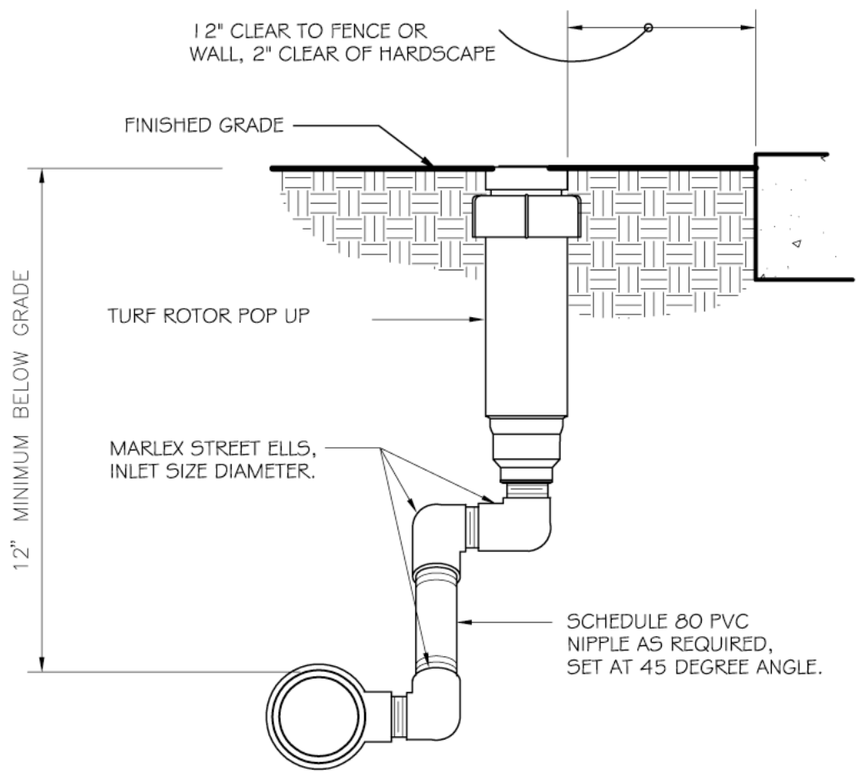

1 TURN ROTOR MARLEX ASSEMBLY

NTS

328403.16-01

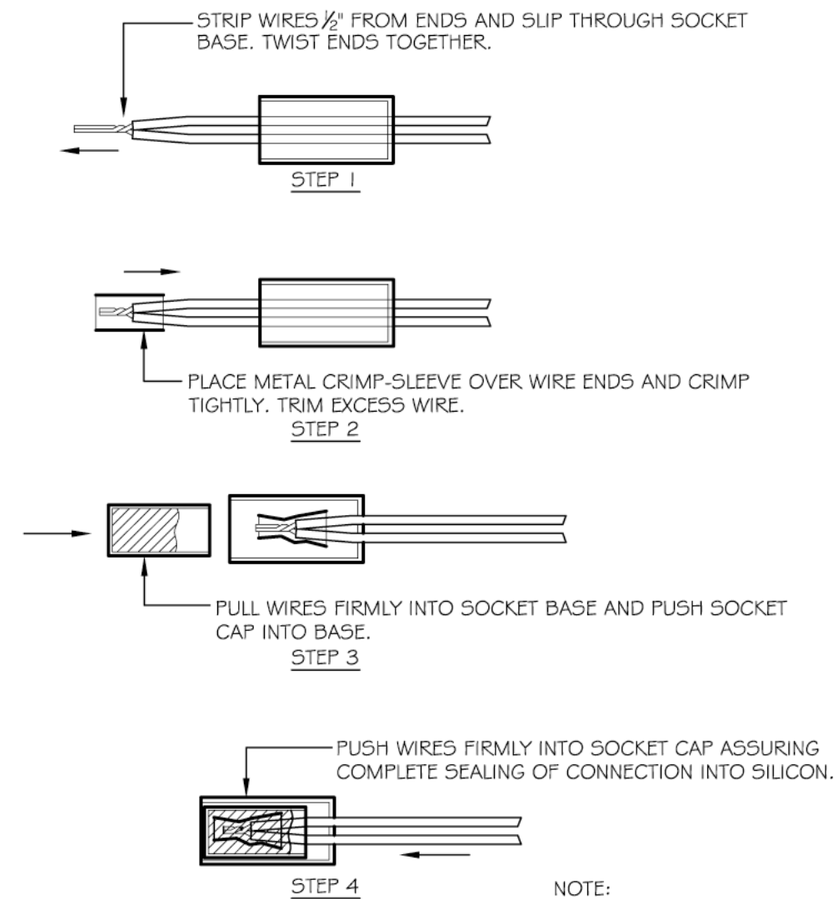

NOTE:
1. USE SPEARS 'DRI-SPLICE' FOR SPLICES.

2 WIRE SPLICE DETAIL

NTS

328406.13-10

REGISTERED LANDSCAPE ARCHITECT
DANIEL F. MACHADO
No. 3789
30APR12
STATE OF CALIFORNIA

MARK	DATE	MADE BY	CHECKED	DESCRIPTION

REVISIONS

Ps1 Landscape Architecture
816 Hampshire Court
Modesto, CA 95350
T 209.544.3994

Ps1LA

AECOM
AECOM
1120 WEST "I" STREET, SUITE C
LOS BANOS, CALIFORNIA 93635
T. 209.826.5155
F. 209.826.3307
www.aecom.com

CITY OF LOS BANOS
SAN LUIS AND PLACE ROAD
STORMDRAIN PIPELINE AND BASIN

Details

PROJECT NO:	60188586
CAD DWG FILE:	129-10 CD DETAILS
DESIGNED BY:	DFM
DRAWN BY:	DFM
DEPT CHECK:	
PROJ CHECK:	
DATE:	5/6/2011
SCALE:	

L115

SHEET 34 OF 41

PATH/FILENAME: _Field 2124681946
LAST UPDATE: Friday, May 06, 2011 7:35:00 AM
PLOT DATE: Friday, May 06, 2011 8:39:00 AM
ANSI D - 6-May-11

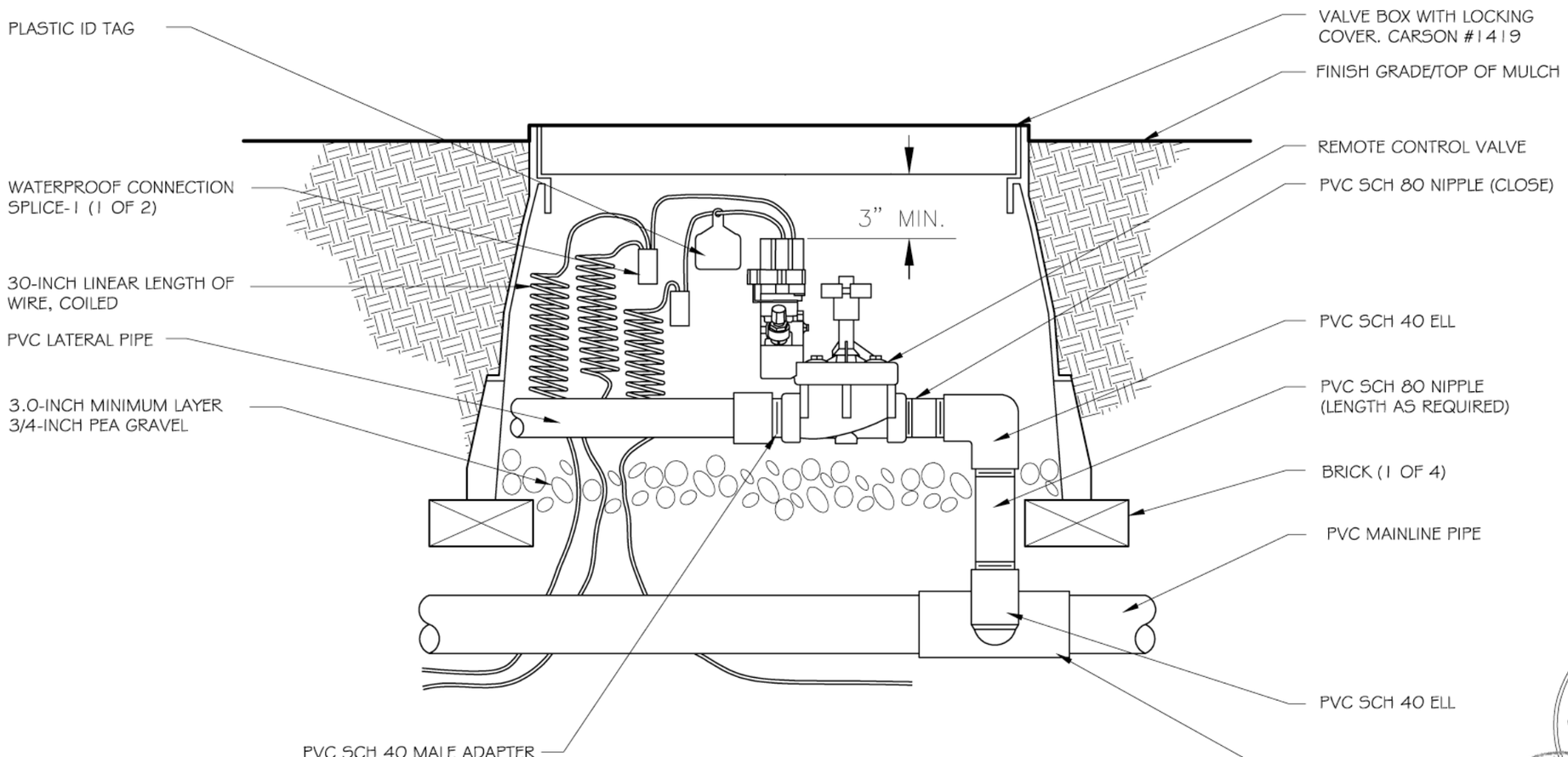

1 REMOTE CONTROL VALVE

NTS

328406.13-06

Ps1 Landscape Architecture
816 Hampshire Court
Modesto, CA 95350
T 209.544.3994

Ps1LA

AECOM
AECOM
1120 WEST "I" STREET, SUITE C
LOS BANOS, CALIFORNIA 93635
T: 209.826.5155
F: 209.826.3307
www.aecom.com

MARK	DATE	MADE BY	CHECKED	DESCRIPTION

REVISIONS

CITY OF LOS BANOS
SAN LUIS AND PLACE ROAD
STORMDRAIN PIPELINE AND BASIN

Details

REGISTERED LANDSCAPE ARCHITECT
DANIEL F. MACHADO
No. 3789
Exp. 30APR12
STATE OF CALIFORNIA

PROJECT NO:	60188586
CAD DWG FILE:	129-10 CD DETAILS
DESIGNED BY:	DFM
DRAWN BY:	DFM
DEPT CHECK:	
PROJ CHECK:	
DATE:	5/6/2011
SCALE:	

L116

SHEET 35 OF 41

PATH/FILENAME: _Fidd 212408194B
LAST UPDATE: Friday, May 06, 2011 2:28:02 PM
PLOT DATE: Friday, May 06, 2011 2:51:42 PM
ANSI D - 6-May-11

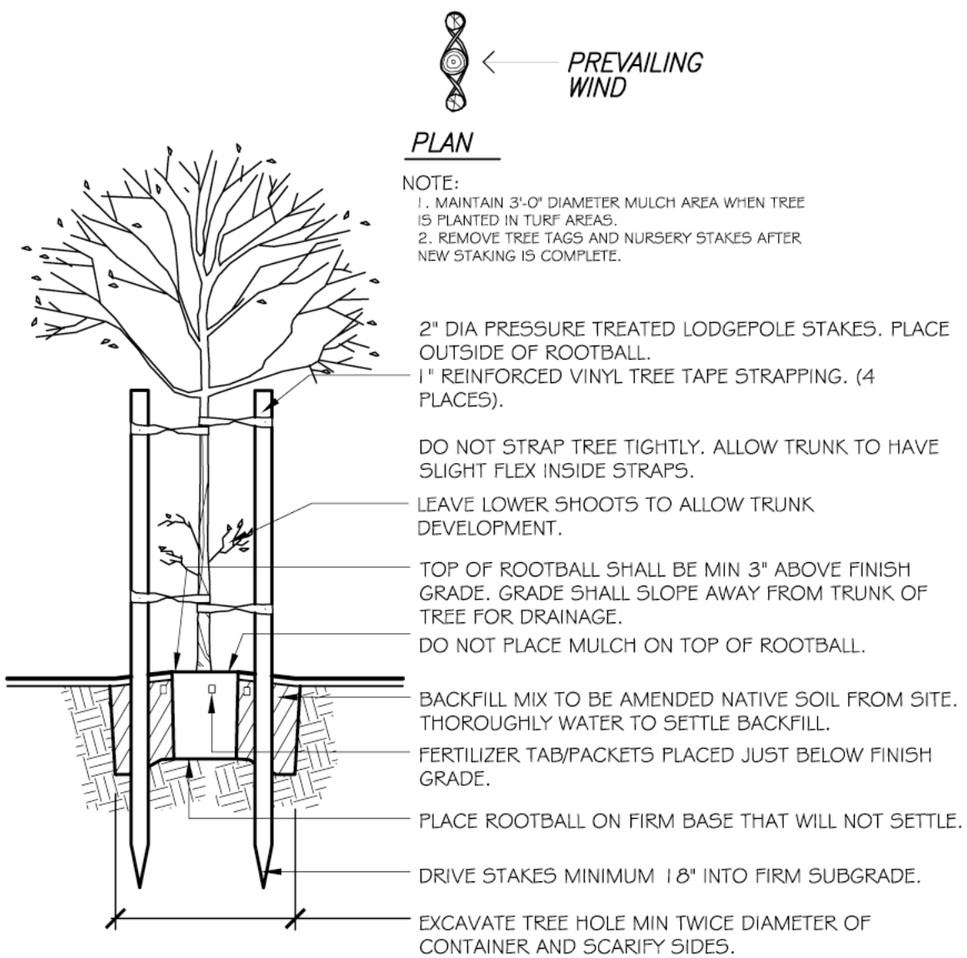

1 TREE INSTALLATION

NTS

329343-70

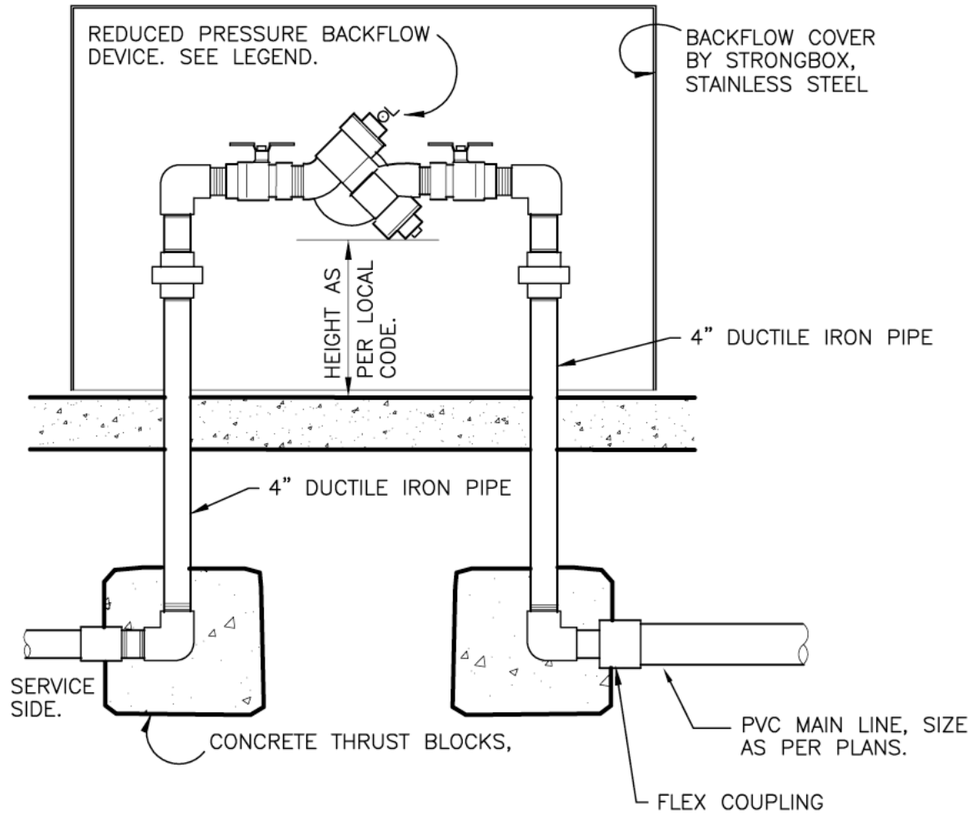

2 RP BACKFLOW W/ENCLOSURE

NTS

328409.46-03

REGISTERED LANDSCAPE ARCHITECT
DANIEL F. MACHADO
No. 3789
Exp. 30APR12
STATE OF CALIFORNIA

MARK	DATE	MADE BY	CHECKED	DESCRIPTION

REVISIONS

Ps1 Landscape Architecture
816 Hampshire Court
Modesto, CA 95350
T 209.544.3994

Ps1LA

AECOM
AECOM
1120 WEST "I" STREET, SUITE C
LOS BANOS, CALIFORNIA 93635
T: 209.826.5155
F: 209.826.3307
www.aecom.com

CITY OF LOS BANOS
SAN LUIS AND PLACE ROAD
STORM/DRAIN PIPELINE AND BASIN

Details

PROJECT NO: 60188586
CAD DWG FILE: 129-10 CD DETAILS
DESIGNED BY: DFM
DRAWN BY: DFM
DEPT CHECK:
PROJ CHECK:
DATE: 5/7/2011
SCALE:

L117

SHEET 36 OF 41

PLOT DATE: Saturday, May 07, 2011 10:22:34 PM
PATH/FILENAME: _Field 2124681948
LAST UPDATE: Saturday, May 07, 2011 8:41:40 AM
ANSI D – 7-May-11

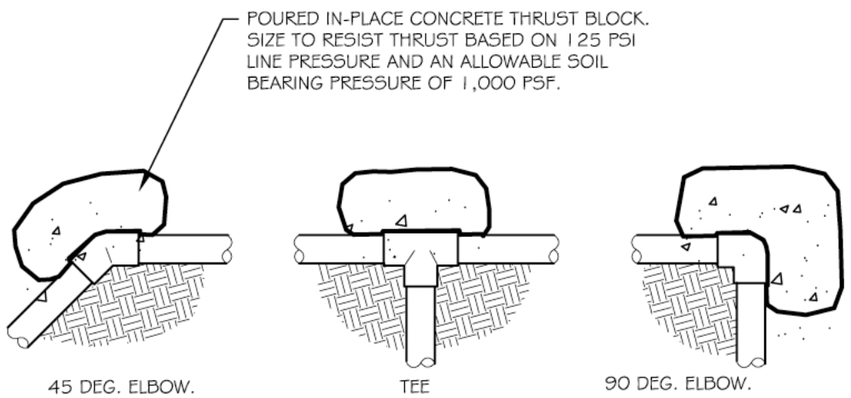

PLAN VIEW

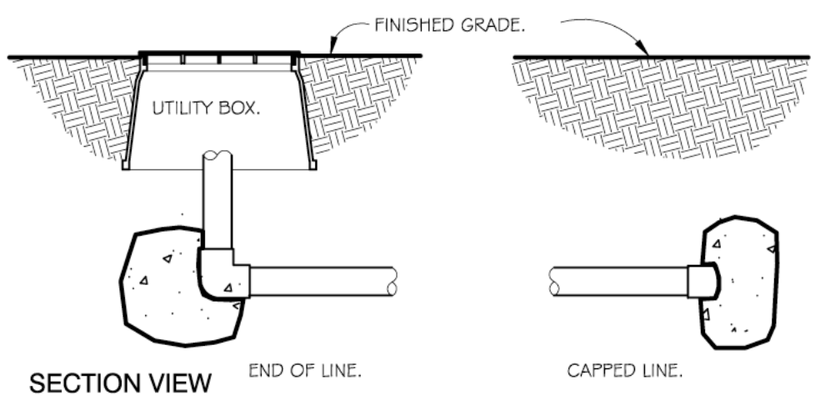

SECTION VIEW

1 THRUST BLOCKING

NTS

328409.76-01

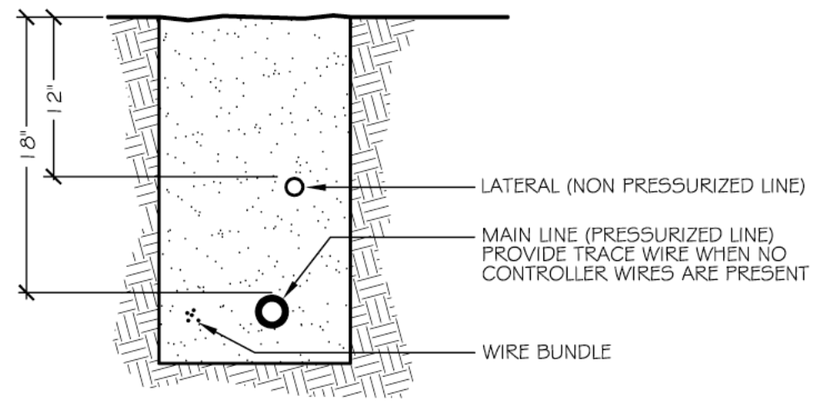

SECTION THROUGH TRENCH

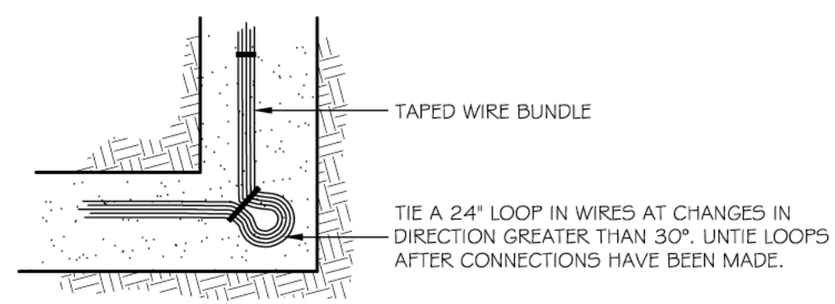

PLAN VIEW OF CONTROLLER WIRES

NOTES:

1. SNAKE PIPES IN TRENCHES FROM SIDE TO SIDE DURING INSTALLATION.
2. TIE WIRES TOGETHER AT 20' MAXIMUM INTERVALS.
3. INSTALL 12V WIRING MINIMUM 24" BELOW GRADE AND IN CONDUIT PER LOCAL CODES.
4. COMPACT TRENCHES TO 85% R.C.

2 TRENCHING DETAIL

NTS

328409.76-05

REGISTERED LANDSCAPE ARCHITECT
DANIEL F. MACHADO
No. 3789
Exp. 30APR12
STATE OF CALIFORNIA

MARK	DATE	MADE BY	CHECKED	DESCRIPTION

REVISIONS

Ps1 Landscape Architecture
816 Hampshire Court
Modesto, CA 95350
T 209.544.3994

Ps1LA

AECOM
AECOM
1120 WEST "I" STREET, SUITE C
LOS BANOS, CALIFORNIA 93635
T: 209.826.5155
F: 209.826.3307
www.aecom.com

CITY OF LOS BANOS
SAN LUIS AND PLACE ROAD
STORMDRAIN PIPELINE AND BASIN

Details

PROJECT NO: 60188586
CAD DWG FILE: 129-10 CD DETAILS
DESIGNED BY: DFM
DRAWN BY: DFM
DEPT CHECK:
PROJ CHECK:
DATE: 5/6/2011
SCALE:

L118

PATH/FILENAME: _field 2124681848
LAST UPDATE: Friday, May 06, 2011 2:26:02 PM
PLOT DATE: Friday, May 06, 2011 2:53:31 PM
ANSI D - 6-May-11

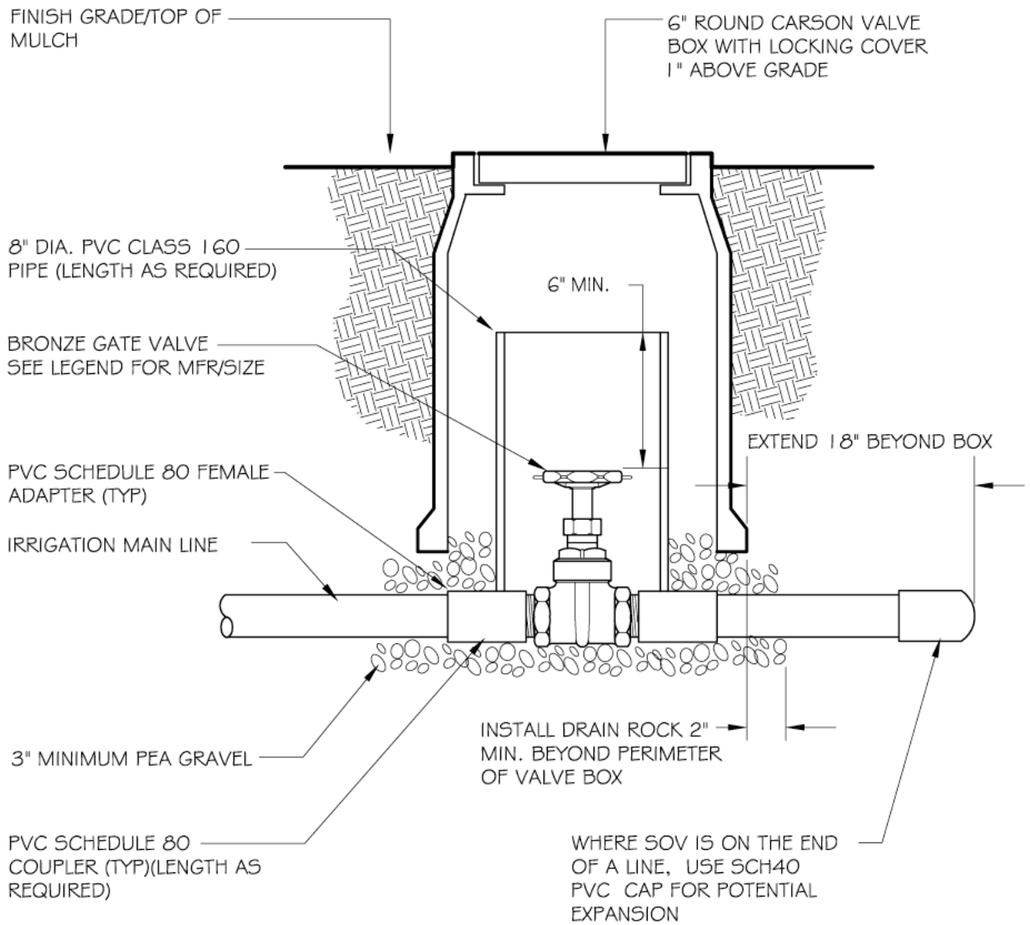

1 SHUT OFF VALVE

NTS

328406.33-05

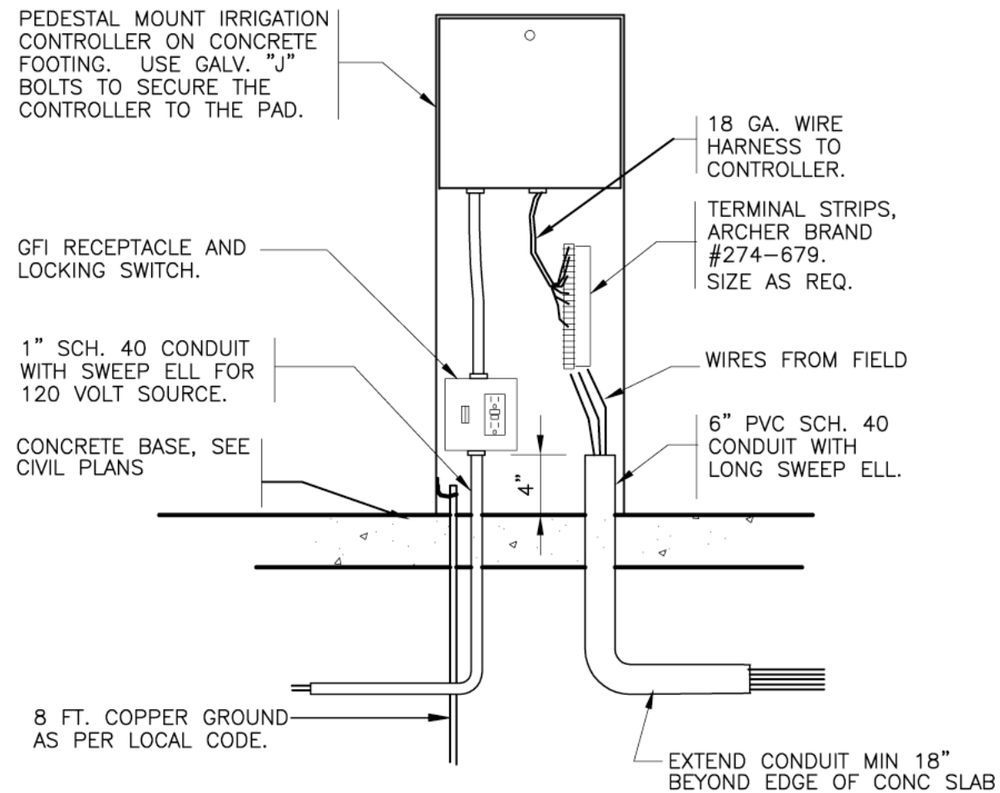

2 PEDESTAL MOUNT CONTROLLER

NTS

328409.13-04

REGISTERED LANDSCAPE ARCHITECT
DANIEL F. MACHADO
3789
STATE OF CALIFORNIA

MARK	DATE	MADE BY	CHECKED	DESCRIPTION

REVISIONS

Ps1 Landscape Architecture
816 Hampshire Court
Modesto, CA 95350
T 209.544.3994

Ps1LA

AECOM
AECOM
1120 WEST "I" STREET, SUITE C
LOS BANOS, CALIFORNIA 93635
T: 209.826.5155
F: 209.826.3307
www.aecom.com

CITY OF LOS BANOS
SAN LUIS AND PLACE ROAD
STORMDRAIN PIPELINE AND BASIN

Details

PROJECT NO:	60188586
CAD DWG FILE:	129-10 CD DETAILS
DESIGNED BY:	DFM
DRAWN BY:	DFM
DEPT CHECK:	
PROJ CHECK:	
DATE:	5/6/2011
SCALE:	

L119

SHEET 38 OF 41

PATH/FILENAME: _field 212481848
LAST UPDATE: Friday, May 06, 2011 2:26:02 PM
PLOT DATE: Friday, May 06, 2011 2:54:10 PM
ANSI D - 6-May-11

REFERENCE NOTES SCHEDULE

SYMBOL	DESCRIPTION
1	Play structure and resilient surface specifications see details on sheet L121
2	Benches by QuickCrete (4) total Model # Q1EM84B-C11-T1-STD
3	4" compacted decomposed granite surface over compacted base. See Detail 1/L122

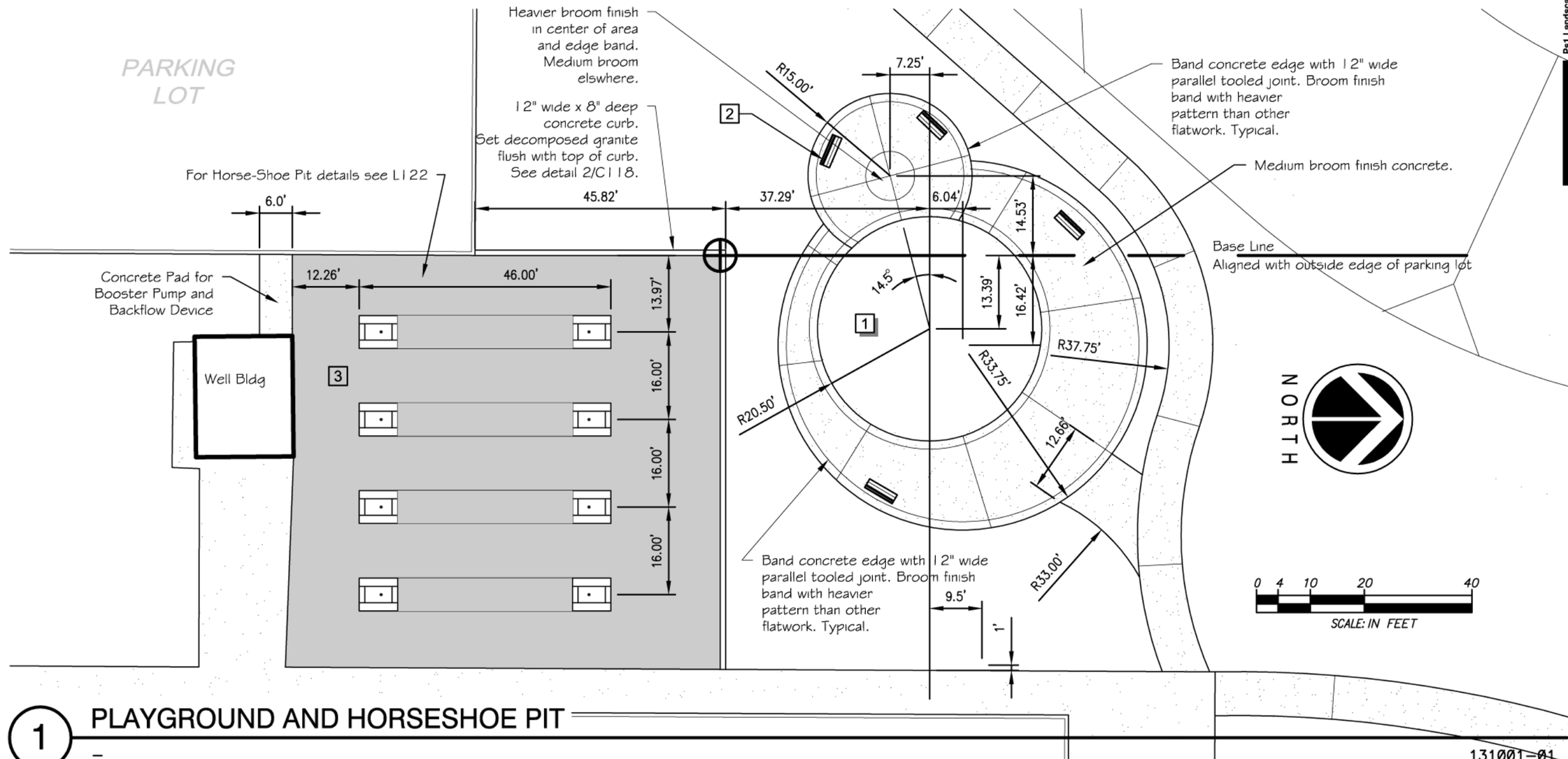

1 PLAYGROUND AND HORSESHOE PIT

131001-01

REGISTERED LANDSCAPE ARCHITECT
DANIEL F. MACHADO
No. 3789
STATE OF CALIFORNIA

MARK	DATE	MADE BY	CHECKED	DESCRIPTION

REVISIONS

Ps1 Landscape Architecture
816 Hampshire Court
Modesto, CA 95350
T 209.544.3994

Ps1LA

AECOM
AECOM
1120 WEST "I" STREET, SUITE C
LOS BANOS, CALIFORNIA 93635
T: 209.826.5155
F: 209.826.3307
www.aecom.com

CITY OF LOS BANOS
SAN LUIS AND PLACE ROAD
STORMDRAIN PIPELINE AND BASIN

Details

PROJECT NO:	60188586
CAD DWG FILE:	129-10 CD DETAILS
DESIGNED BY:	DFM
DRAWN BY:	DFM
DEPT CHECK:	
PROJ CHECK:	
DATE:	5/9/2011
SCALE:	

L120

SHEET 39 OF 41

PATH/FILENAME: \\fsld 2124681848
LAST UPDATE: Saturday, May 07, 2011 10:43:00 PM
PLOT DATE: Monday, May 09, 2011 12:56:33 PM
ANSI D - 7-May-11

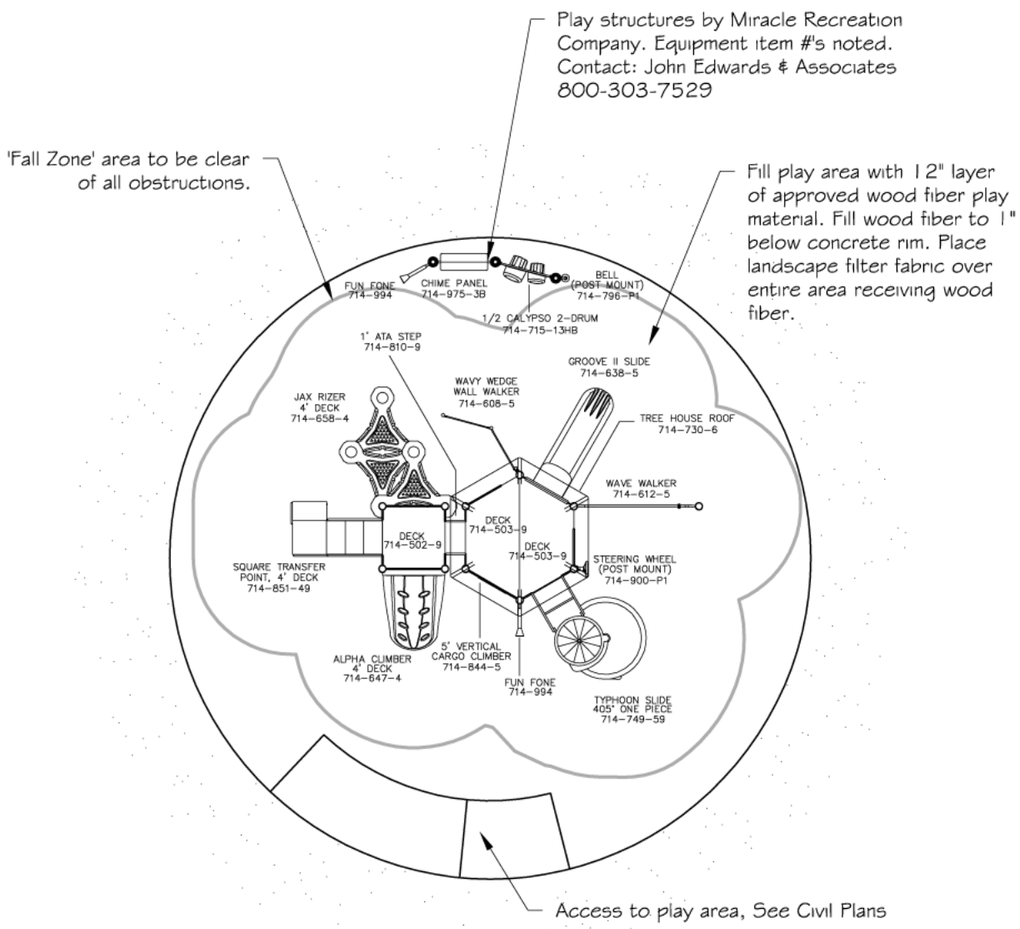

1

PLAY STRUCTURE LAYOUT

NTS

131001-02

Ps1 Landscape Architecture
816 Hampshire Court
Modesto, CA 95350
T 209.544.3994

Ps1LA

AECOM

AECOM
1120 WEST "I" STREET, SUITE C
LOS BANOS, CALIFORNIA 93635
T: 209.826.5155
F: 209.826.3307
www.aecom.com

MARK	DATE	MADE BY	CHECKED	DESCRIPTION

REVISIONS

CITY OF LOS BANOS
SAN LUIS AND PLACE ROAD
STORMDRAIN PIPELINE AND BASIN

Details

REGISTERED LANDSCAPE ARCHITECT
DANIEL F. MACHADO
No. 3789
STATE OF CALIFORNIA

PROJECT NO:	60188586
CAD DWG FILE:	129-10 CD DETAILS
DESIGNED BY:	DFM
DRAWN BY:	DFM
DEPT CHECK:	
PROJ CHECK:	
DATE:	5/9/2011
SCALE:	

L121

SHEET 40 OF 41

PATH/FILENAME: \\fsld 212481848
LAST UPDATE: Saturday, May 07, 2011 10:43:00 PM
PLOT DATE: Monday, May 09, 2011 1:27:06 PM
ANSI D - 7-May-11

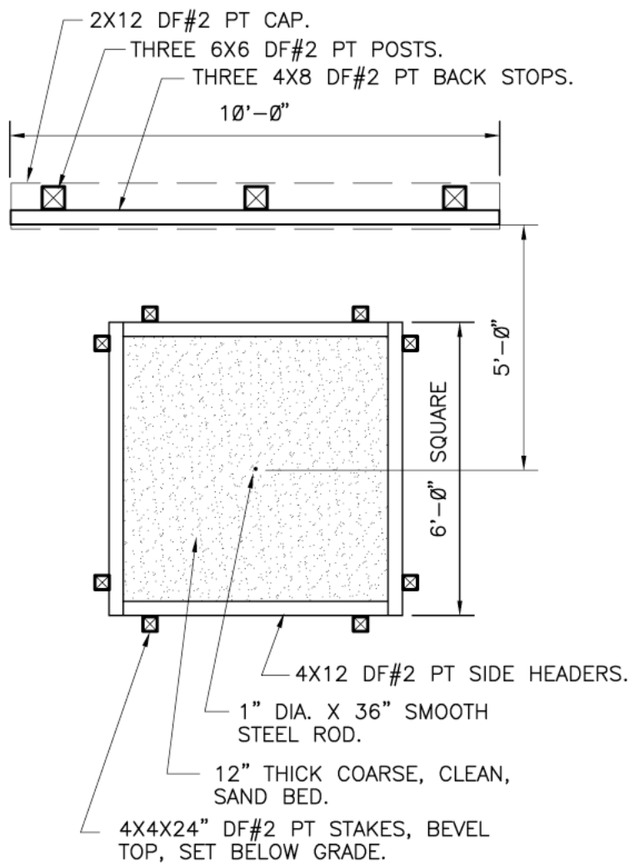

DETAIL PLAN VIEW

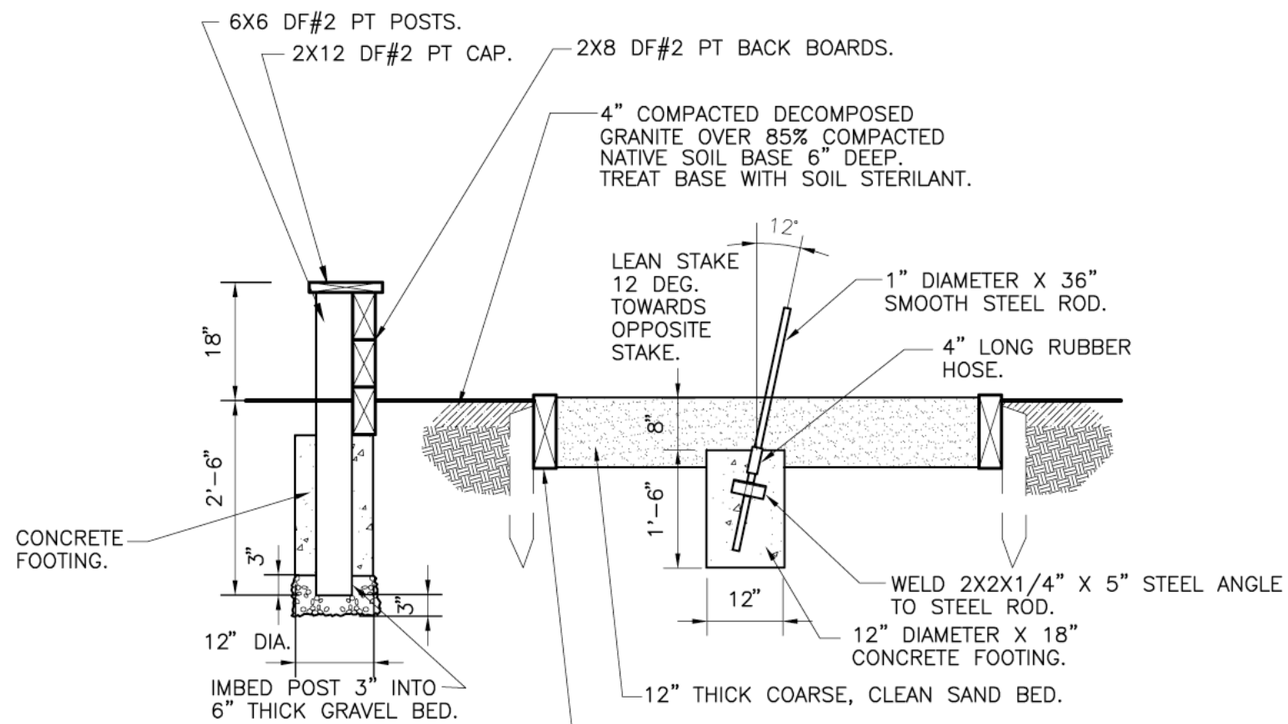

SECTION VIEW

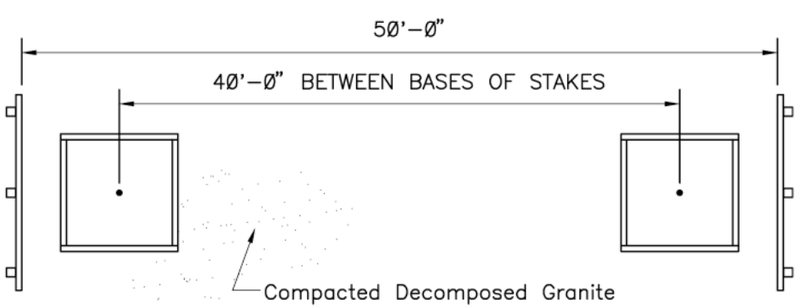

OVERALL PLAN VIEW

1 HORSESHOE PIT

NTS

Ps1 Landscape Architecture
816 Hampshire Court
Modesto, CA 95350
T 209.544.3994

Ps1LA

AECOM
AECOM
1120 WEST "I" STREET, SUITE C
LOS BANOS, CALIFORNIA 93635
T: 209.826.5155
F: 209.826.3307
www.aecom.com

MARK	DATE	MADE BY	CHECKED	DESCRIPTION

REVISIONS

CITY OF LOS BANOS
SAN LUIS AND PLACE ROAD
STORMDRAIN PIPELINE AND BASIN

Details

REGISTERED LANDSCAPE ARCHITECT
DANIEL F. MACHADO
No. 3789
Exp. 30APR12
STATE OF CALIFORNIA

PROJECT NO:	60188586
CAD DWG FILE:	129-10 CD DETAILS
DESIGNED BY:	DFM
DRAWN BY:	DFM
DEPT CHECK:	
PROJ CHECK:	
DATE:	5/6/2011
SCALE:	

L122

SHEET 41 OF 41

PATH/FILENAME: _hdd 2124681848
LAST UPDATE: Friday, May 06, 2011 4:27:56 PM
PLOT DATE: Friday, May 06, 2011 4:30:31 PM
ANSI D - 6-May-11